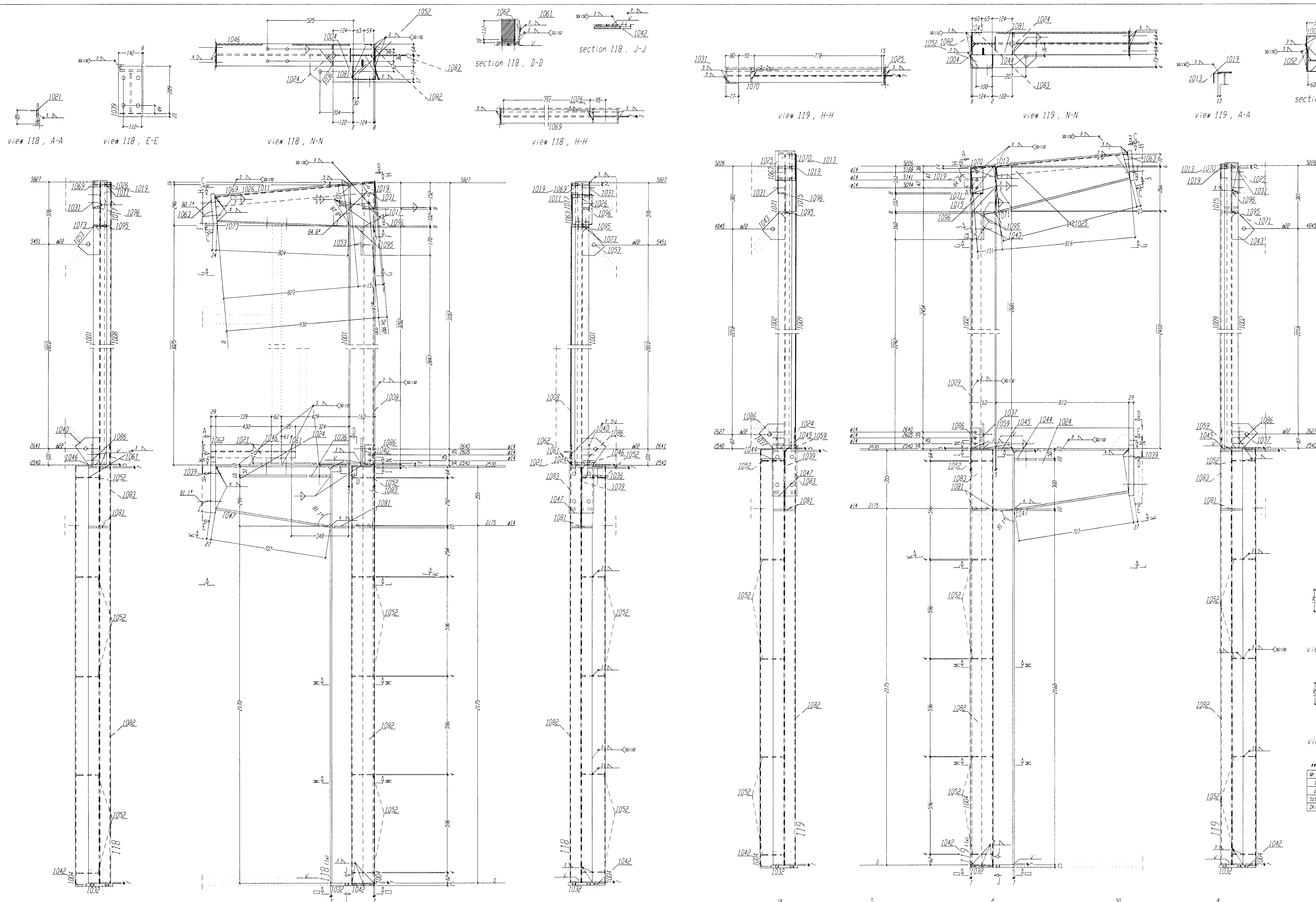

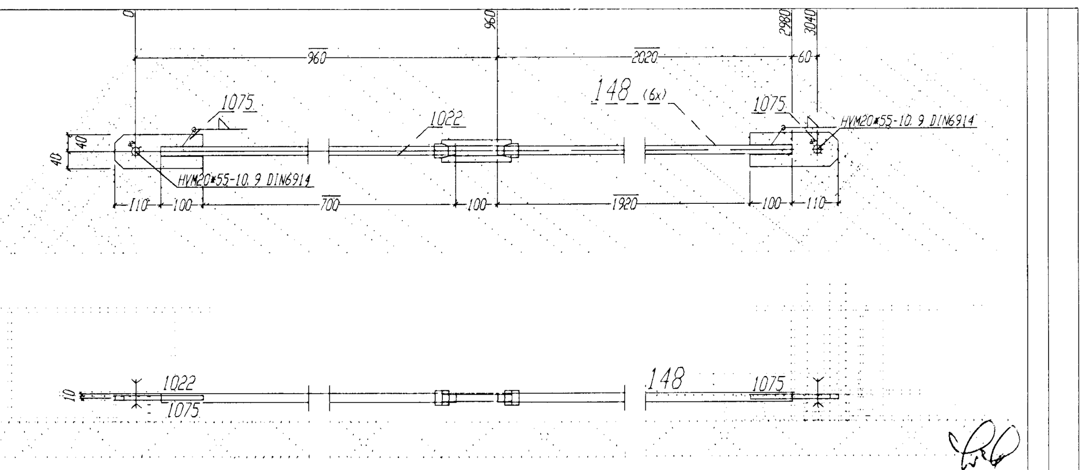

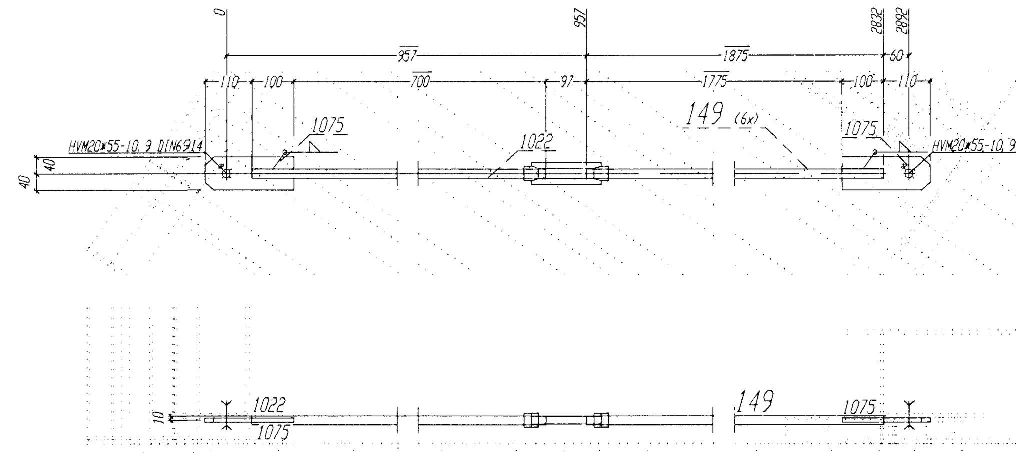

bill of material for 1 Ship-pos. 148 total 6 X done

Nr.	Tnr	pos.	designation	qty	profil	quality	length	weight	Rem.
1	1	148	ZUGSTANGE	1	RUND20	S235JRG2	2020	4.98	
2	1	1022	ZUGSTANGE	1	RUND20	S235JRG2	800	1.97	
3	1	1075	ANSCHLUSZFLACH	2	BL10*80	S235JRG2	210	2.64	
total weight (kg)								9.59	
Shipping dimensions (H x B x L): 80 x 20 x 3140									

Sambykkt þann
08 JULI 2008
Byggingarfulltrúinn í Hafnarfirði
F.h. Hrólfur S. Gunnlaugsson

bill of material for 1 Ship-pos. 149 total 6 X done

Nr.	Tnr	pos.	designation	qty	profil	quality	length	weight	Rem.
1	1	149	ZUGSTANGE	1	RUND20	S235JRG2	1875	4.62	
2	1	1022	ZUGSTANGE	1	RUND20	S235JRG2	800	1.97	
3	1	1075	ANSCHLUSZFLACH	2	BL10*80	S235JRG2	210	2.64	
total weight (kg)								9.23	
Shipping dimensions (H x B x L): 80 x 20 x 2992									

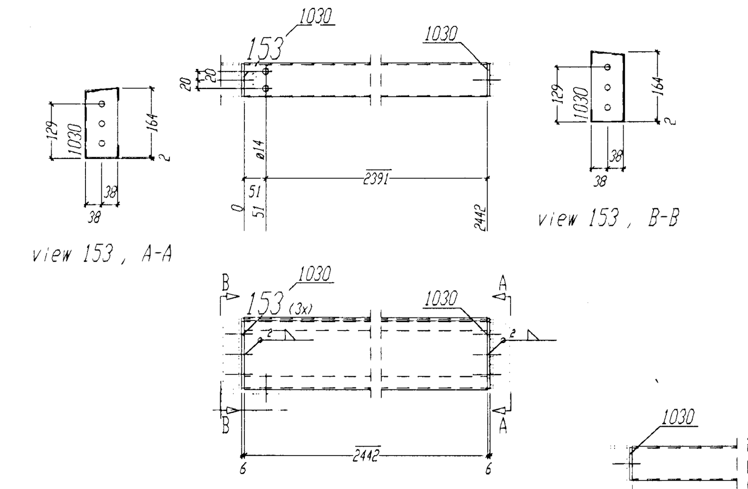

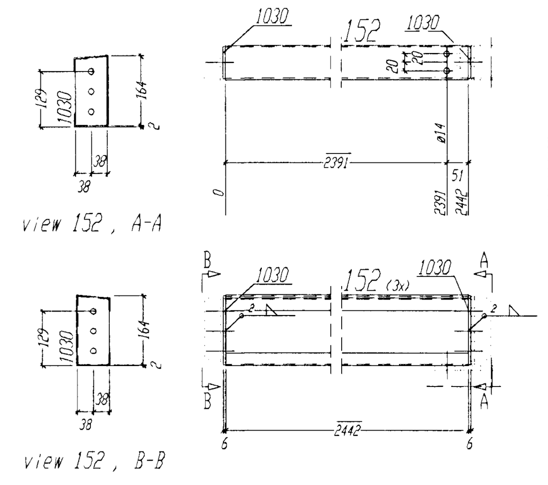

bill of material for 1 Ship-pos. 153 total 3 X done

Nr.	Tnr	pos.	designation	qty	profil	quality	length	weight	Rem.
1	1	153	TRAEGER	1	BL366*3	S235JRG2	2442	21.05	
2	1	1030	BLECH	2	BL6*164	S235JRG2	76	1.17	
total weight (kg)								22.22	
Shipping dimensions (H x B x L): 168 x 80 x 2454									

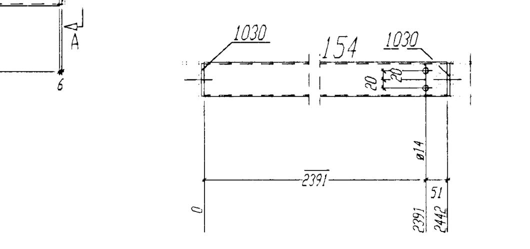

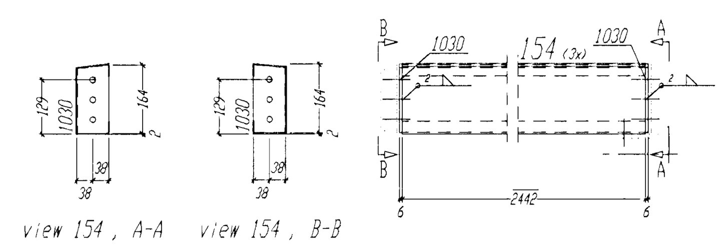

bill of material for 1 Ship-pos. 152 total 3 X done

Nr.	Tnr	pos.	designation	qty	profil	quality	length	weight	Rem.
1	1	152	TRAEGER	1	BL373*3	S235JRG2	2442	21.45	
2	1	1030	BLECH	2	BL6*164	S235JRG2	76	1.17	
total weight (kg)								22.62	
Shipping dimensions (H x B x L): 168 x 80 x 2454									

bill of material for 1 Ship-pos. 154 total 3 X done

Nr.	Tnr	pos.	designation	qty	profil	quality	length	weight	Rem.
1	1	154	TRAEGER	1	BL366*3	S235JRG2	2442	21.05	
2	1	1030	BLECH	2	BL6*164	S235JRG2	76	1.17	
total weight (kg)								22.22	
Shipping dimensions (H x B x L): 168 x 80 x 2454									

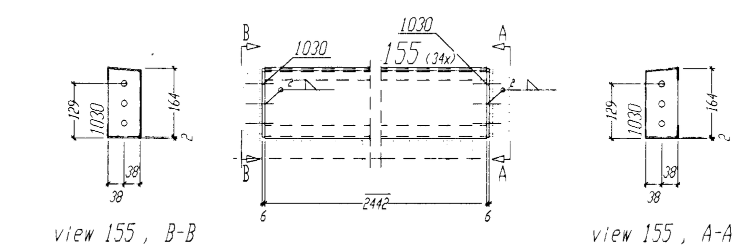

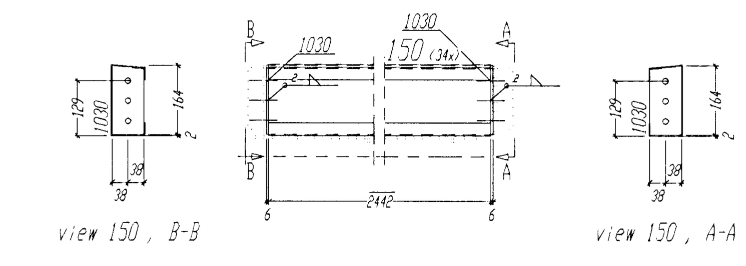

bill of material for 1 Ship-pos. 155 total 34 X done

Nr.	Tnr	pos.	designation	qty	profil	quality	length	weight	Rem.
1	1	155	TRAEGER	1	BL366*3	S235JRG2	2442	21.05	
2	1	1030	BLECH	2	BL6*164	S235JRG2	76	1.17	
total weight (kg)								22.22	
Shipping dimensions (H x B x L): 168 x 80 x 2454									

bill of material for 1 Ship-pos. 150 total 34 X done

Nr.	Tnr	pos.	designation	qty	profil	quality	length	weight	Rem.
1	1	150	TRAEGER	1	BL373*3	S235JRG2	2442	21.45	
2	1	1030	BLECH	2	BL6*164	S235JRG2	76	1.17	
total weight (kg)								22.62	
Shipping dimensions (H x B x L): 168 x 80 x 2454									

bill of material for 1 Ship-pos. 118 total 1 X done

Nr.	Tnr	pos.	designation	qty	profil	quality	length	weight	Rem.
1	1	118	TRAEGER	1	IPE270	S355J2G3	2530	91.33	
2	1	1001		1	IPE160	S355J2G3	3287	51.93	
3	1	1004		1	BLU140*80*3	S235JRG2	2539	17.58	
4	1	1008	PLATTE	1	L60*40*4	S235JRG2	3017	9.20	
5	1	1011	PLATTE	1	L60*40*4	S235JRG2	821	2.50	
6	1	1017	PLATTE	1	L60*40*4	S235JRG2	201	.61	
7	1	1019	PLATTE	1	L60*40*4	S355J2G3	151	.46	
8	1	1021	BLECH	1	L40*4	S235JRG2	515	1.25	
9	1	1024	STEGBLECH	1	BL8*358	S355J2G3	700	15.72	
10	1	1026	STEGBLECH	1	BL6*245	S355J2G3	820	9.44	
11	1	1031	BLECH	1	BL6*162	S235JRG2	76	.58	
12	1	1032	TRAEGER	1	BL15*160	S355J2G3	270	5.09	
13	1	1036	KNOTENBLECH	1	BL10*158	S235JRG2	130	1.61	
14	1	1039	PLATTE	1	FL150*30	S355J2G3	310	10.95	
15	1	1040	KNOTENBLECH	1	BL10*146	S235JRG2	165	1.90	
16	1	1042	TRAEGER	1	FL140*10	S355J2G3	68	.74	
17	1	1046	PLATTE	1	BL10*135	S355J2G3	970	10.28	
18	1	1047	PLATTE	1	BL10*135	S355J2G3	707	7.49	
19	1	1052	TRAEGER	5	BL4*134	S235JRG2	141	2.97	
20	1	1053	KNOTENBLECH	1	BL10*133	S235JRG2	170	1.77	
21	1	1061	PLATTE	1	BL8*125	S235JRG2	409	3.21	
22	1	1062	PLATTE	1	BL8*125	S235JRG2	368	2.89	
23	1	1063	PLATTE	1	FL120*25	S355J2G3	180	4.24	
24	1	1069	PLATTE	1	BL8*82	S355J2G3	982	5.05	
25	1	1073	PLATTE	1	BL8*82	S355J2G3	804	4.14	
26	1	1081	RIPPE	2	BL10*64	S355J2G3	248	2.48	
27	1	1082	PLATTE	1	BL4*60	S235JRG2	2160	4.07	
28	1	1083	PLATTE	1	BL4*60	S235JRG2	360	.68	
29	1	1086		1	FL60*8	S235JRG2	120	.45	
30	1	1095	RIPPE	2	BL8*38	S355J2G3	144	.69	
31	1	1096	RIPPE	1	BL8*38	S235JRG2	70	.17	
total weight (kg)								271.48	
Shipping dimensions (H x B x L): 1004 x 269 x 5850									

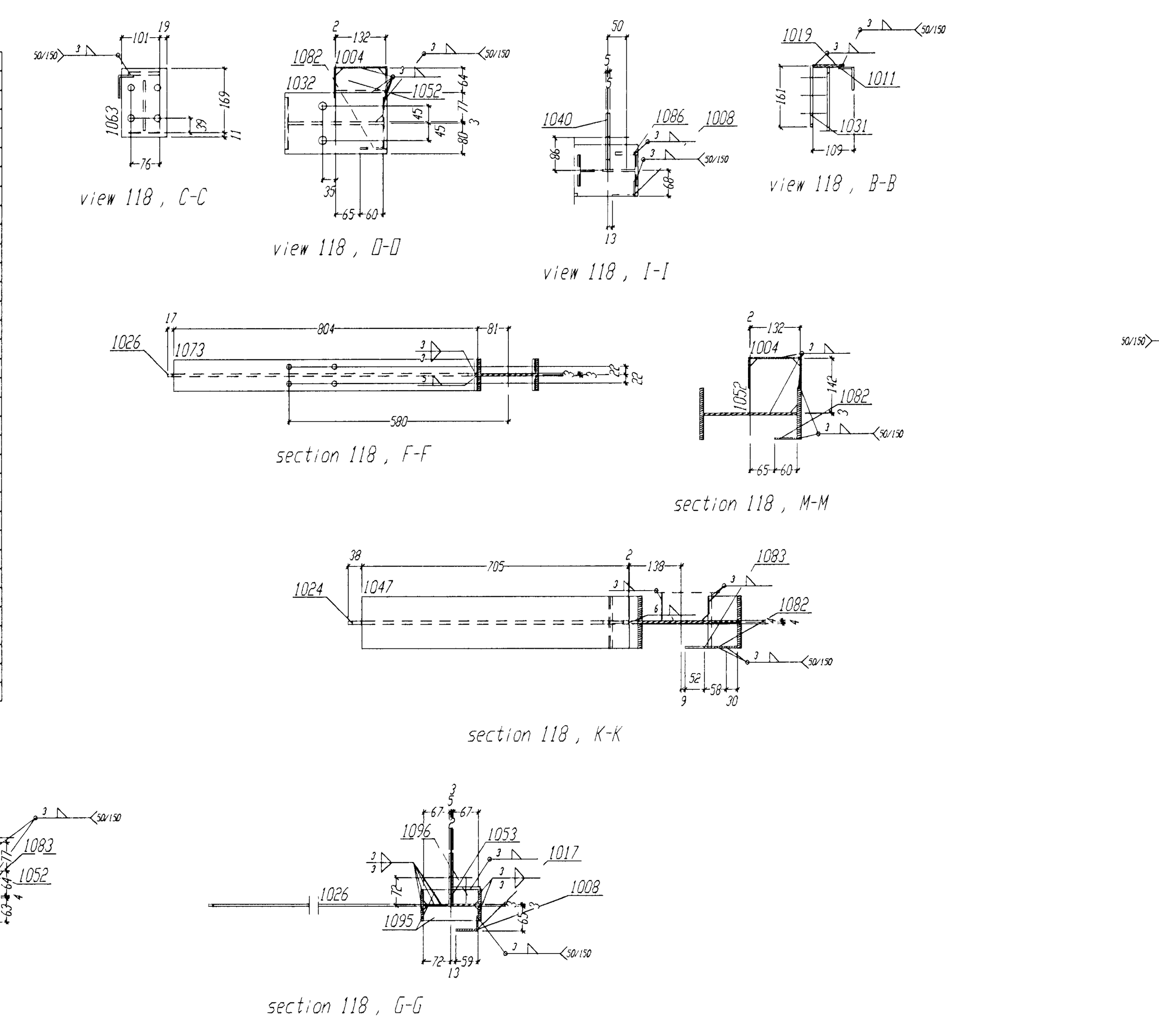

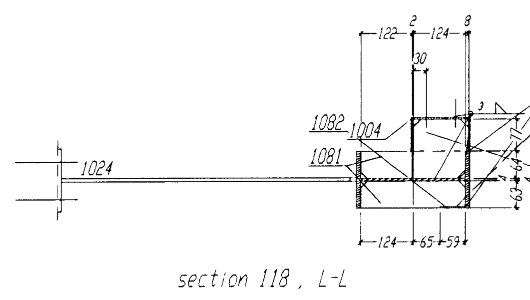

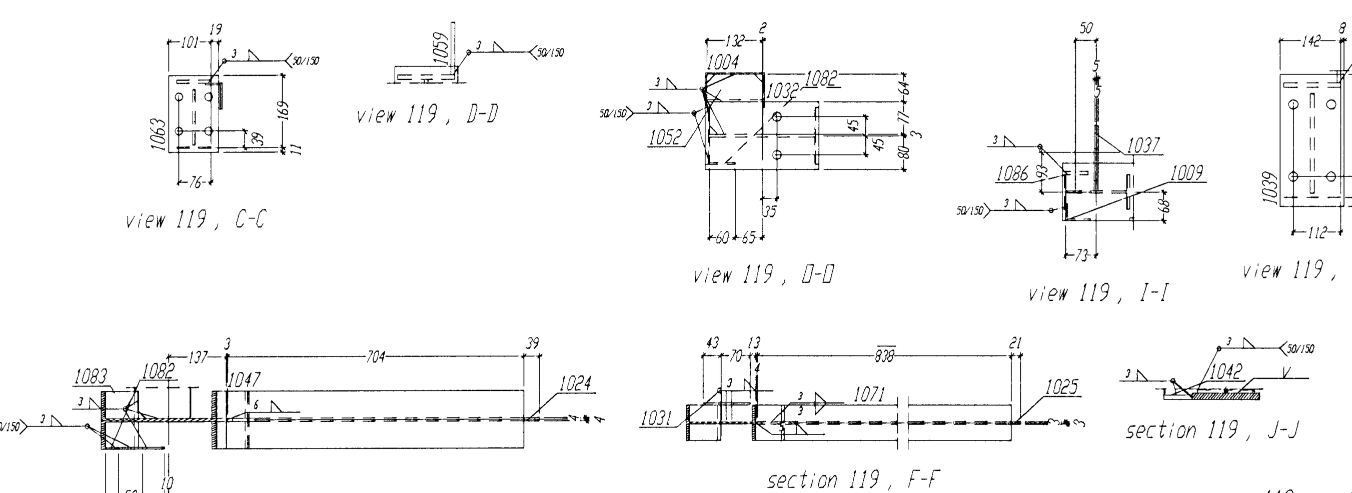

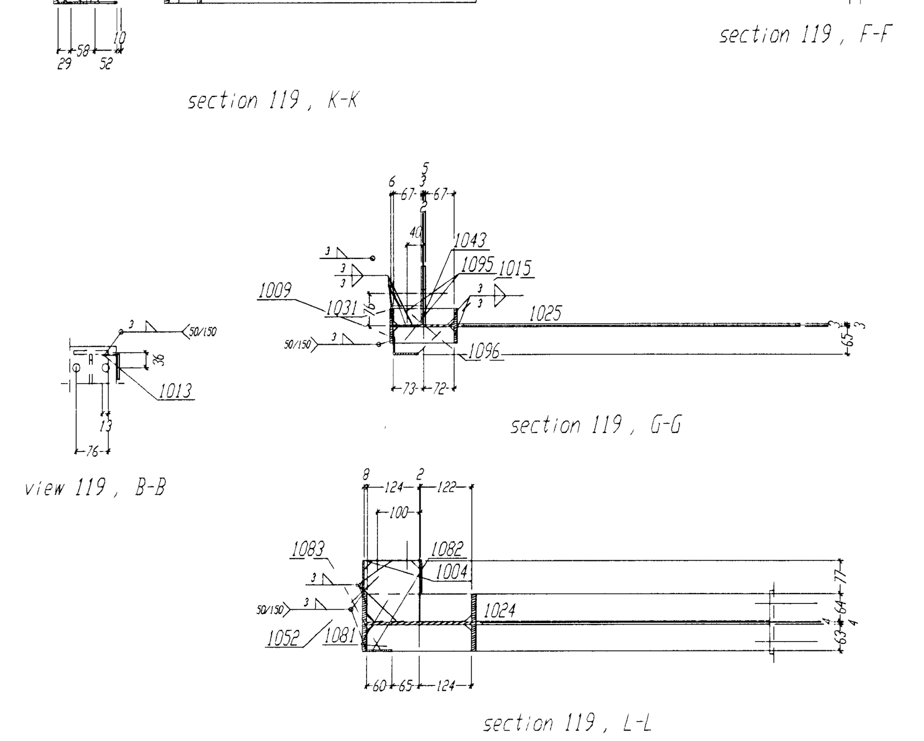

bill of material for 1 Ship-pos. 119 total 1 X done

Nr.	Tnr	pos.	designation	qty	profil	quality	length	weight	Rem.
1	1	119	TRAEGER	1	IPE270	S355J2G3	2530	91.33	
2	1	1002		1	IPE160	S355J2G3	2686	42.45	
3	1	1004		1	BLU140*80*3	S235JRG2	2539	17.58	
4	1	1009	PLATTE	1	L60*40*4	S235JRG2	2402	7.33	
5	1	1013	PLATTE	1	L60*40*4	S235JRG2	813	2.48	
6	1	1015	PLATTE	1	L60*40*4	S235JRG2	208	.63	
7	1	1019	PLATTE	1	L60*40*4	S355J2G3	151	.46	
8	1	1024	STEGBLECH	1	BL8*358	S355J2G3	700	15.72	
9	1	1025	STEGBLECH	1	BL6*273	S355J2G3	831	10.69	
10	1	1031	BLECH	1	BL6*162	S235JRG2	76	.58	
11	1	1032	TRAEGER	1	BL15*160	S355J2G3	270	5.09	
12	1	1037	KNOTENBLECH	1	BL10*154	S235JRG2	150	1.82	
13	1	1039	PLATTE	1	FL150*30	S355J2G3	310	10.95	
14	1	1042	TRAEGER	1	FL140*10	S355J2G3	68	.74	
15	1	1043	KNOTENBLECH	1	BL10*137	S235JRG2	160	1.72	
16	1	1044	KNOTENBLECH	1	BL10*136	S235JRG2	135	1.44	
17	1	1045	PLATTE	1	BL10*135	S355J2G3	970	10.28	
18	1	1047	PLATTE	1	BL10*135	S355J2G3	707	7.49	
19	1	1052	TRAEGER	5	BL4*134	S235JRG2	141	2.97	
20	1	1059	PLATTE	1	BL6*125	S235JRG2	839	6.59	
21	1	1063	PLATTE	1	FL120*25	S355J2G3	180	4.24	
22	1	1070	PLATTE	1	BL8*82	S355J2G3	968	4.98	
23	1	1071	PLATTE	1	BL8*82	S355J2G3	842	4.33	
24	1	1081	RIPPE	2	BL10*64	S355J2G3	248	2.48	
25	1	1082	PLATTE	1	BL4*60	S235JRG2	2160	4.07	
26	1	1083	PLATTE	1	BL4*60	S235JRG2	360	.68	
27	1	1086		1	FL60*8	S235JRG2	120	.45	
28	1	1095	RIPPE	2	BL6*38	S355J2G3	144	.69	
29	1	1096	RIPPE	1	BL6*38	S235JRG2	70	.17	
total weight (kg)								260.43	
Shipping dimensions (H x B x L): 1004 x 237 x 5334									

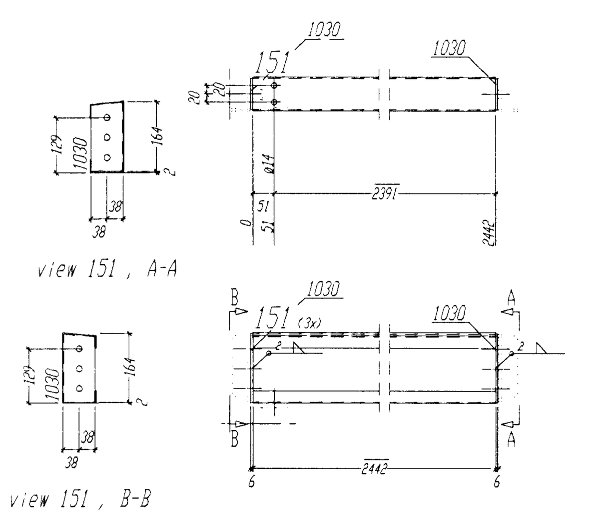

bill of material for 1 Ship-pos. 151 total 3 X done

Nr.	Tnr	pos.	designation	qty	profil	quality	length	weight	Rem.
1	1	151	TRAEGER	1	BL373*3	S235JRG2	2442	21.45	
2	1	1030	BLECH	2	BL6*164	S235JRG2	76	1.17	
total weight (kg)								22.62	
Shipping dimensions (H x B x L): 168 x 80 x 2454									

BL, FL = PLATE
RÖHR = TUBE
RUND = STEEL BAR
MSH = RHS
SCHR. = BOLT, SCREW

Tolerance for welded constructions According to DIN 8570, Pt. 1+3/B+F, 10.87

Welding (W P S) according to DIN-EN 288 - 2

All unmarked welds to be fillet continuous a=4mm thick, not greater than 0.7 d of the thinner element

The material for cap plates >20 mm thick to be examined for laminations

Required torques, prestressing forces and forced tension angles according to DIN 18800 Pt. 7, 05.83

1	2	3	4	5		6		
		Prestressing of HV bolts (Class 10.9) according to						
Bolts	Required compressing force F_V	a) Torque techniques: Manual torque wrench, Required grip rotary moment, Lubricated MoS_2 [1]	Slightly oiled	b) Impulse technique: Mechanical impact wrench, Req. compressing force F_V [2]	c) Angle of rotation techniques: Required tightening torque M_V [2]	Grip length l_K	Angle of rotation	Rot. measure
	kN	Nm	Nm	kN	Nm	mm	phi	U
1 M12	50	100	120	60	10	M12 to M22: lk < 50	180	1/2
2 M16	100	250	350	110	50	51 < lk < 100	240	2/3
3 M20	160	450	600	175		101 < lk < 170	270	3/4
4 M22	190	650	900	210	100	171 < lk < 240	360	1
5 M24	220	800	1100	240		M24 to M36: lk < 50	180	1/2
6 M27	290	1250	1650	320	200	51 < lk < 100	240	2/3
7 M30	350	1650	2200	390		101 < lk < 240	270	3/4
8 M36	510	2800	3800	560				

[1] Due to the great dependence of the Mv value on the type of thread lubricant adhere to the bolt manufacturer's recommendations.
[2] Independently on the lubricant of the threads and surfaces of bolts and nuts. CAUTION: For hot galvanized HV bolts use values from column 3.

Sveinbjörn Hinriksson
Byggingatæknifræðingur
Kt. 160851-2529
Brekkugötu 8 Hafnarfirði
Sími: 555-4008, 861-9851
Netfang: svennih@internet.is

(signature) 23.5.07

	DATE	NAME	SIGNATURE
Designed by	15.11.2007	K.Hucho	
Compiled by			
Verified by			

fó

1:10 SCALE

Pos. 118-119, 148-155

DESC. -GJAHELLA 15 -221 HAFNARFJORDUR

ERRAND | DRAWING NO. 105 | SHEET Bl.

INDEX | CHANGES | DATE | NAME