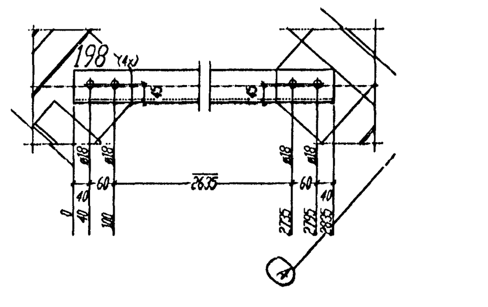

** bill of material for 1 Ship- pos. 198 total 4 X done

| Nr. | Tnr | pos. | designation | qty | profil | quality | length | weight | Rem. |
|---|---|---|---|---|---|---|---|---|---|
| 1 | 1 | 198 | DIAGONALE | 1 | L80*8 | S235JRG2 | 2835 | 27.30 | |

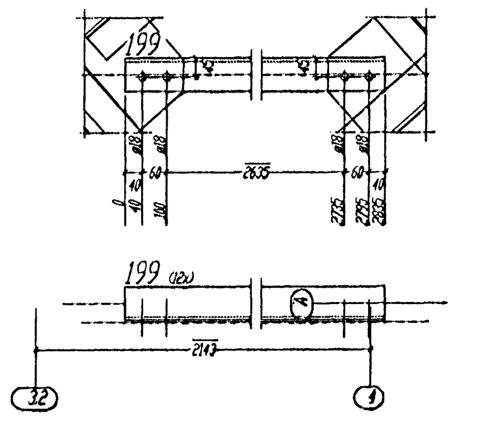

** bill of material for 1 Ship- pos. 199 total 12 X done

| Nr. | Tnr | pos. | designation | qty | profil | quality | length | weight | Rem. |
|---|---|---|---|---|---|---|---|---|---|
| 1 | 1 | 199 | DIAGONALE | 1 | L80*8 | S235JRG2 | 2835 | 27.30 | |

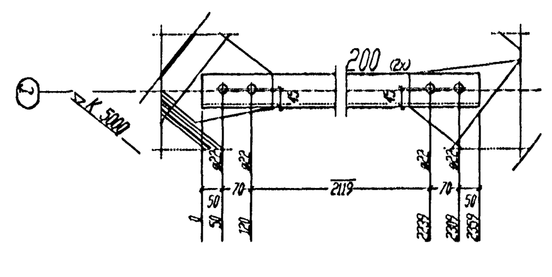

** bill of material for 1 Ship- pos. 200 total 2 X done

| Nr. | Tnr | pos. | designation | qty | profil | quality | length | weight | Rem. |
|---|---|---|---|---|---|---|---|---|---|
| 1 | 1 | 200 | DIAGONALE | 1 | L80*8 | S235JRG2 | 2359 | 22.71 | |

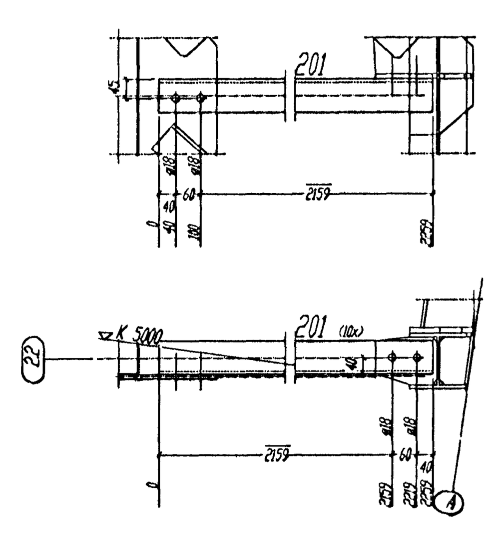

** bill of material for 1 Ship- pos. 201 total 10 X done

| Nr. | Tnr | pos. | designation | qty | profil | quality | length | weight | Rem. |
|---|---|---|---|---|---|---|---|---|---|
| 1 | 1 | 201 | DIAGONALE | 1 | L80*8 | S235JRG2 | 2259 | 21.76 | |

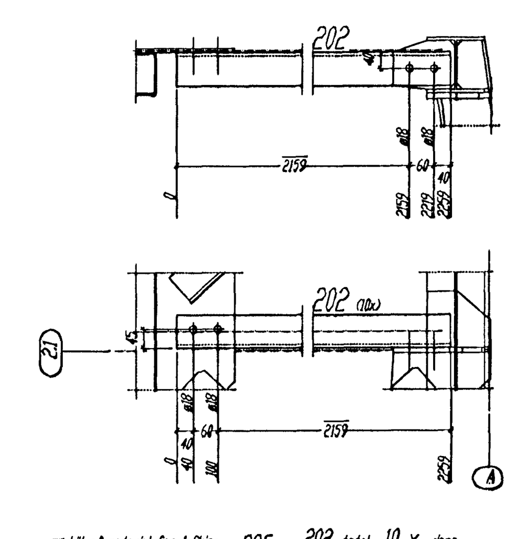

** bill of material for 1 Ship- pos. 202 total 10 X done

| Nr. | Tnr | pos. | designation | qty | profil | quality | length | weight | Rem. |
|---|---|---|---|---|---|---|---|---|---|
| 1 | 1 | 202 | DIAGONALE | 1 | L80*8 | S235JRG2 | 2259 | 21.76 | |

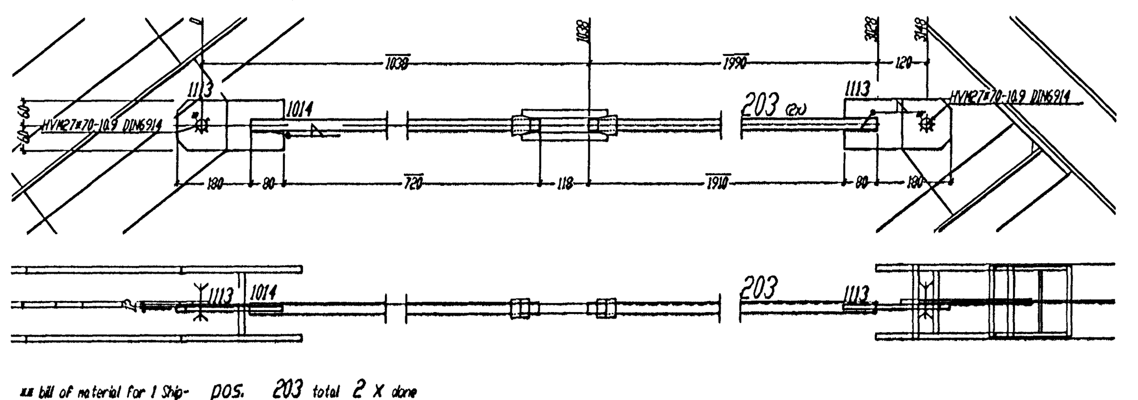

** bill of material for 1 Ship- pos. 203 total 2 X done

| Nr. | Tnr | pos. | designation | qty | profil | quality | length | weight | Rem. |
|---|---|---|---|---|---|---|---|---|---|
| 1 | 1 | 203 | ZUGSTANGE | 1 | RUND27 | S235JRG2 | 1990 | 8.94 | |
| 2 | 1 | 1014 | ZUGSTANGE | 1 | RUND27 | S235JRG2 | 800 | 3.60 | |
| 3 | 1 | 1113 | ANSCHLUSZFLACH | 2 | BL12*120 | S235JRG2 | 260 | 5.88 | |
| total weight (kg) | | | | | | | | 18.42 | |
| Shipping dimensions (H x B x L): 120 x 27 x 3268 | | | | | | | | | |

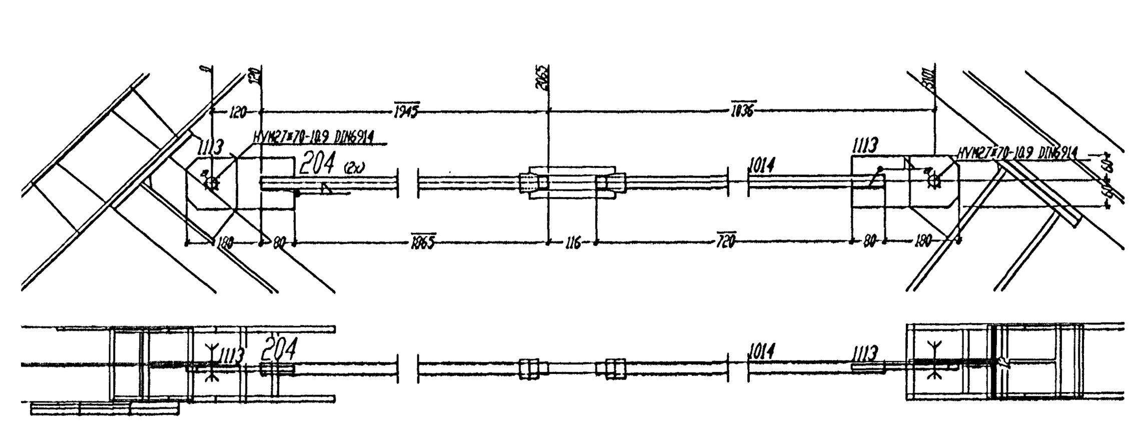

** bill of material for 1 Ship- pos. 204 total 2 X done

| Nr. | Tnr | pos. | designation | qty | profil | quality | length | weight | Rem. |
|---|---|---|---|---|---|---|---|---|---|
| 1 | 1 | 204 | ZUGSTANGE | 1 | RUND27 | S235JRG2 | 1945 | 8.74 | |
| 2 | 1 | 1014 | ZUGSTANGE | 1 | RUND27 | S235JRG2 | 800 | 3.60 | |
| 3 | 1 | 1113 | ANSCHLUSZFLACH | 2 | BL12*120 | S235JRG2 | 260 | 5.88 | |
| total weight (kg) | | | | | | | | 18.22 | |
| Shipping dimensions (H x B x L): 120 x 27 x 3221 | | | | | | | | | |

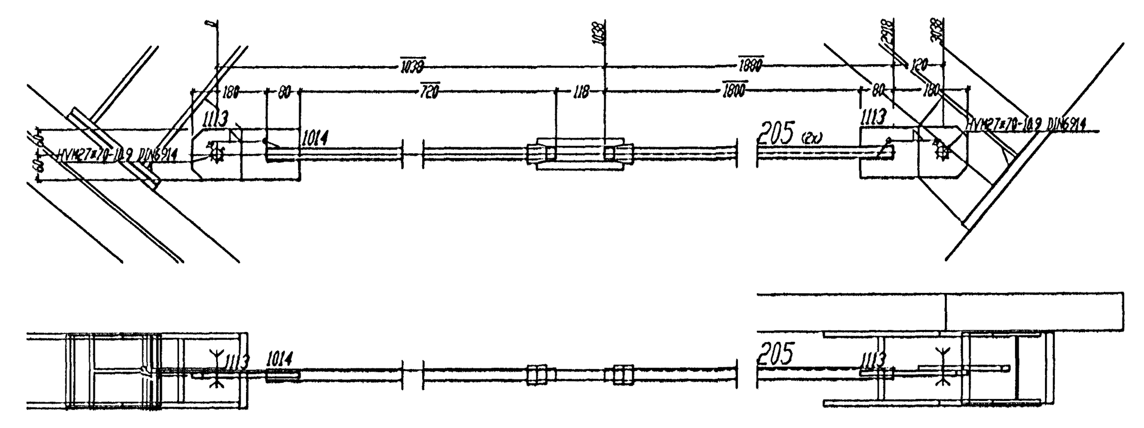

** bill of material for 1 Ship- pos. 205 total 2 X done

| Nr. | Tnr | pos. | designation | qty | profil | quality | length | weight | Rem. |
|---|---|---|---|---|---|---|---|---|---|
| 1 | 1 | 205 | ZUGSTANGE | 1 | RUND27 | S235JRG2 | 1880 | 8.45 | |
| 2 | 1 | 1014 | ZUGSTANGE | 1 | RUND27 | S235JRG2 | 800 | 3.60 | |
| 3 | 1 | 1113 | ANSCHLUSZFLACH | 2 | BL12*120 | S235JRG2 | 260 | 5.88 | |
| total weight (kg) | | | | | | | | 17.92 | |
| Shipping dimensions (H x B x L): 120 x 27 x 3158 | | | | | | | | | |

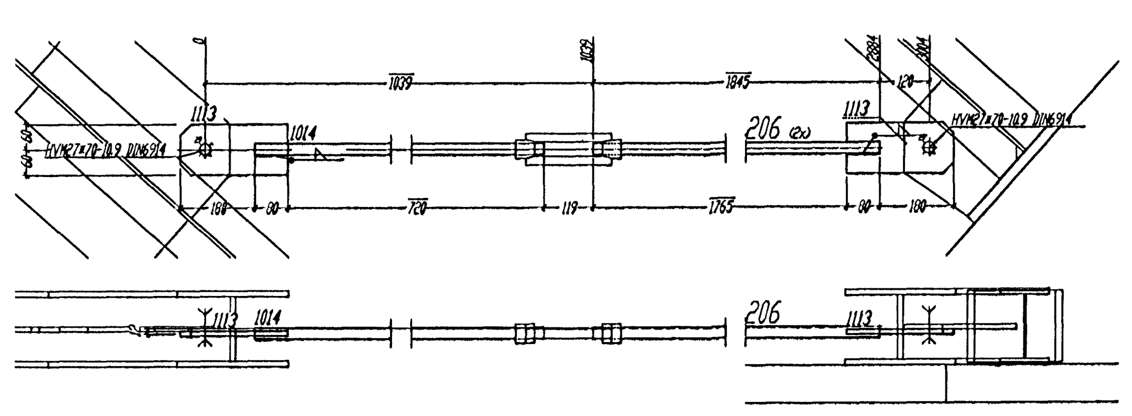

** bill of material for 1 Ship- pos. 206 total 2 X done

| Nr. | Tnr | pos. | designation | qty | profil | quality | length | weight | Rem. |
|---|---|---|---|---|---|---|---|---|---|
| 1 | 1 | 206 | ZUGSTANGE | 1 | RUND27 | S235JRG2 | 1845 | 8.29 | |
| 2 | 1 | 1014 | ZUGSTANGE | 1 | RUND27 | S235JRG2 | 800 | 3.60 | |
| 3 | 1 | 1113 | ANSCHLUSZFLACH | 2 | BL12*120 | S235JRG2 | 260 | 5.88 | |
| total weight (kg) | | | | | | | | 17.77 | |
| Shipping dimensions (H x B x L): 120 x 27 x 3124 | | | | | | | | | |

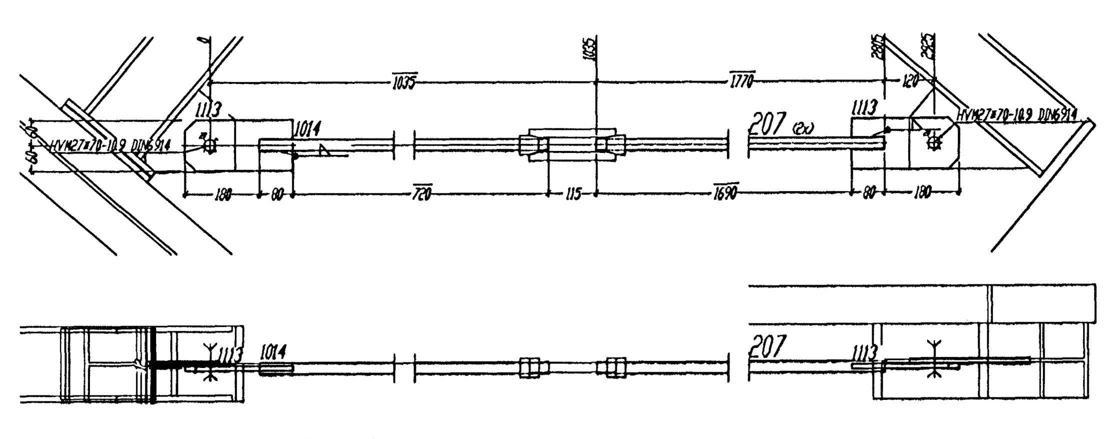

** bill of material for 1 Ship- pos. 207 total 2 X done

| Nr. | Tnr | pos. | designation | qty | profil | quality | length | weight | Rem. |
|---|---|---|---|---|---|---|---|---|---|
| 1 | 1 | 207 | ZUGSTANGE | 1 | RUND27 | S235JRG2 | 1770 | 7.96 | |
| 2 | 1 | 1014 | ZUGSTANGE | 1 | RUND27 | S235JRG2 | 800 | 3.60 | |
| 3 | 1 | 1113 | ANSCHLUSZFLACH | 2 | BL12*120 | S235JRG2 | 260 | 5.88 | |
| total weight (kg) | | | | | | | | 17.43 | |
| Shipping dimensions (H x B x L): 120 x 27 x 3045 | | | | | | | | | |

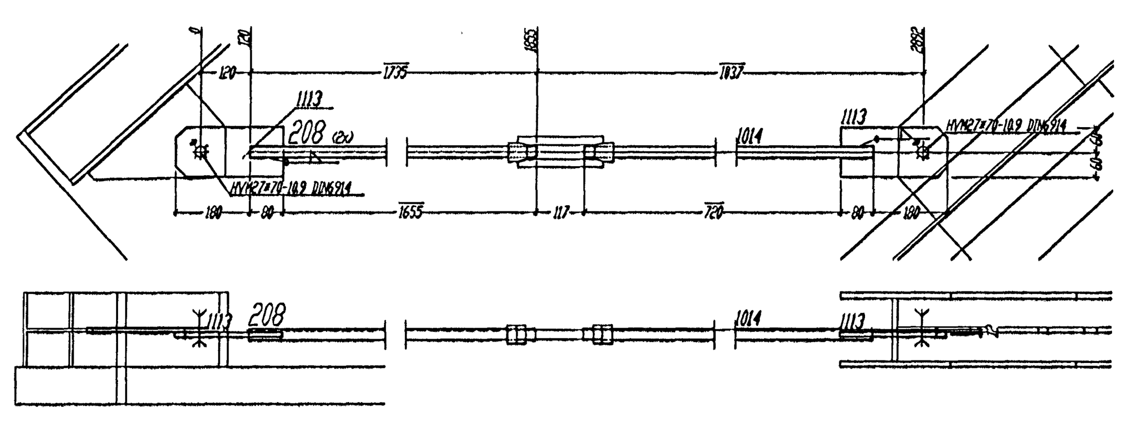

** bill of material for 1 Ship- pos. 208 total 2 X done

| Nr. | Tnr | pos. | designation | qty | profil | quality | length | weight | Rem. |
|---|---|---|---|---|---|---|---|---|---|
| 1 | 1 | 208 | ZUGSTANGE | 1 | RUND27 | S235JRG2 | 1735 | 7.80 | |
| 2 | 1 | 1014 | ZUGSTANGE | 1 | RUND27 | S235JRG2 | 800 | 3.60 | |
| 3 | 1 | 1113 | ANSCHLUSZFLACH | 2 | BL12*120 | S235JRG2 | 260 | 5.88 | |
| total weight (kg) | | | | | | | | 17.27 | |
| Shipping dimensions (H x B x L): 120 x 27 x 3012 | | | | | | | | | |

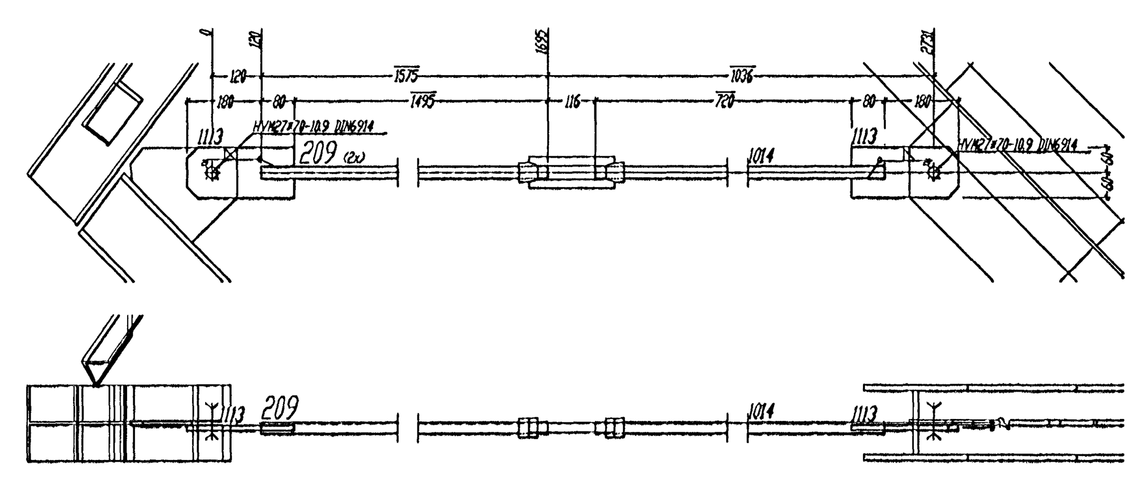

** bill of material for 1 Ship- pos. 209 total 2 X done

| Nr. | Tnr | pos. | designation | qty | profil | quality | length | weight | Rem. |
|---|---|---|---|---|---|---|---|---|---|
| 1 | 1 | 209 | ZUGSTANGE | 1 | RUND27 | S235JRG2 | 1575 | 7.08 | |
| 2 | 1 | 1014 | ZUGSTANGE | 1 | RUND27 | S235JRG2 | 800 | 3.60 | |
| 3 | 1 | 1113 | ANSCHLUSZFLACH | 2 | BL12*120 | S235JRG2 | 260 | 5.88 | |
| total weight (kg) | | | | | | | | 16.55 | |
| Shipping dimensions (H x B x L): 120 x 27 x 2851 | | | | | | | | | |

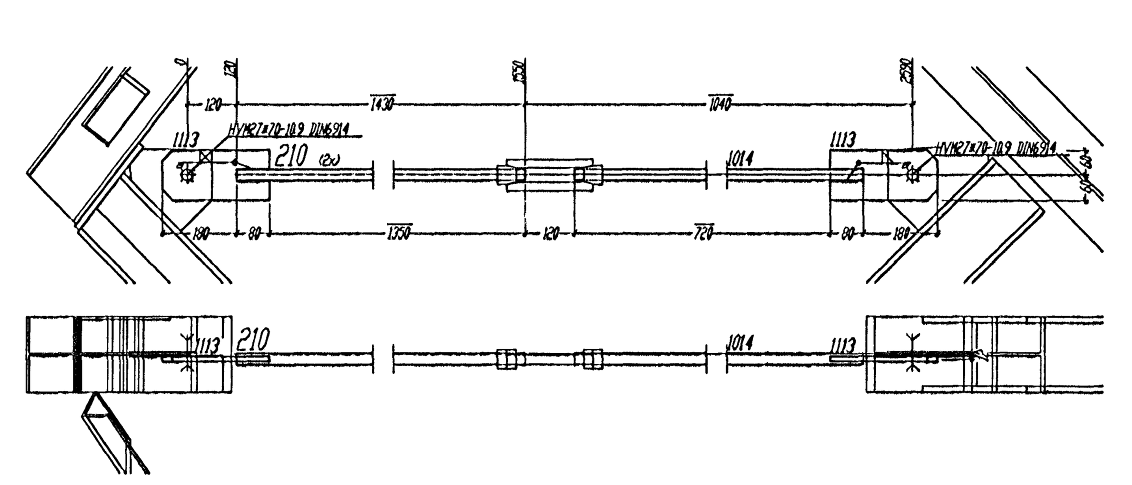

** bill of material for 1 Ship- pos. 210 total 2 X done

| Nr. | Tnr | pos. | designation | qty | profil | quality | length | weight | Rem. |
|---|---|---|---|---|---|---|---|---|---|
| 1 | 1 | 210 | ZUGSTANGE | 1 | RUND27 | S235JRG2 | 1430 | 6.43 | |
| 2 | 1 | 1014 | ZUGSTANGE | 1 | RUND27 | S235JRG2 | 800 | 3.60 | |
| 3 | 1 | 1113 | ANSCHLUSZFLACH | 2 | BL12*120 | S235JRG2 | 260 | 5.88 | |
| total weight (kg) | | | | | | | | 15.90 | |
| Shipping dimensions (H x B x L): 120 x 27 x 2710 | | | | | | | | | |

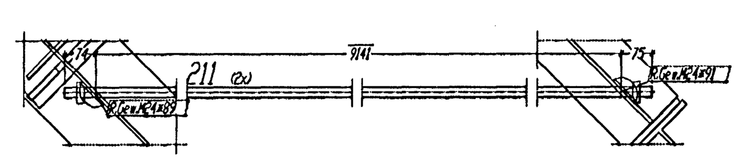

** bill of material for 1 Ship- pos. 211 total 2 X done

| Nr. | Tnr | pos. | designation | qty | profil | quality | length | weight | Rem. |
|---|---|---|---|---|---|---|---|---|---|
| 1 | 1 | 211 | ZUGSTANGE | 1 | RUND24 | S235JRG2 | 9290 | 32.99 | |

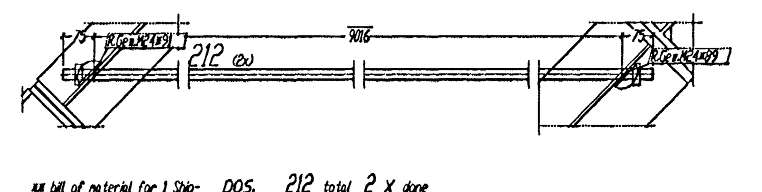

** bill of material for 1 Ship- pos. 212 total 2 X done

| Nr. | Tnr | pos. | designation | qty | profil | quality | length | weight | Rem. |
|---|---|---|---|---|---|---|---|---|---|
| 1 | 1 | 212 | ZUGSTANGE | 1 | RUND24 | S235JRG2 | 9166 | 32.55 | |

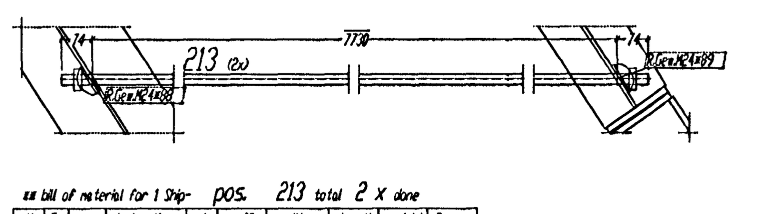

** bill of material for 1 Ship- pos. 213 total 2 X done

| Nr. | Tnr | pos. | designation | qty | profil | quality | length | weight | Rem. |
|---|---|---|---|---|---|---|---|---|---|
| 1 | 1 | 213 | ZUGSTANGE | 1 | RUND24 | S235JRG2 | 7878 | 27.98 | |

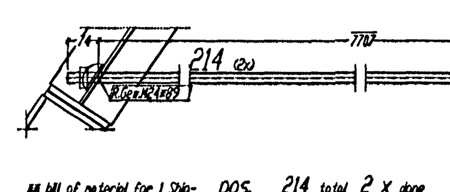

** bill of material for 1 Ship- pos. 214 total 2 X done

| Nr. | Tnr | pos. | designation | qty | profil | quality | length | weight | Rem. |
|---|---|---|---|---|---|---|---|---|---|
| 1 | 1 | 214 | ZUGSTANGE | 1 | RUND24 | S235JRG2 | 7855 | 27.90 | |

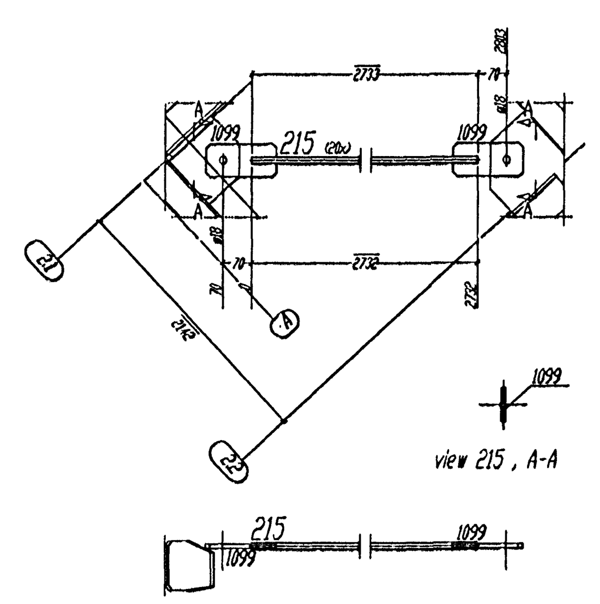

view 215 , A-A

** bill of material for 1 Ship- pos. 215 total 20 X done

| Nr. | Tnr | pos. | designation | qty | profil | quality | length | weight | Rem. |
|---|---|---|---|---|---|---|---|---|---|
| 1 | 1 | 215 | | 1 | RUND16 | S235JRG2 | 2733 | 4.31 | |
| 2 | 1 | 1099 | | 2 | BL10*170 | S235JRG2 | 80 | 2.14 | |
| total weight (kg) | | | | | | | | 6.45 | |
| Shipping dimensions (H x B x L): 16 x 80 x 2952 | | | | | | | | | |

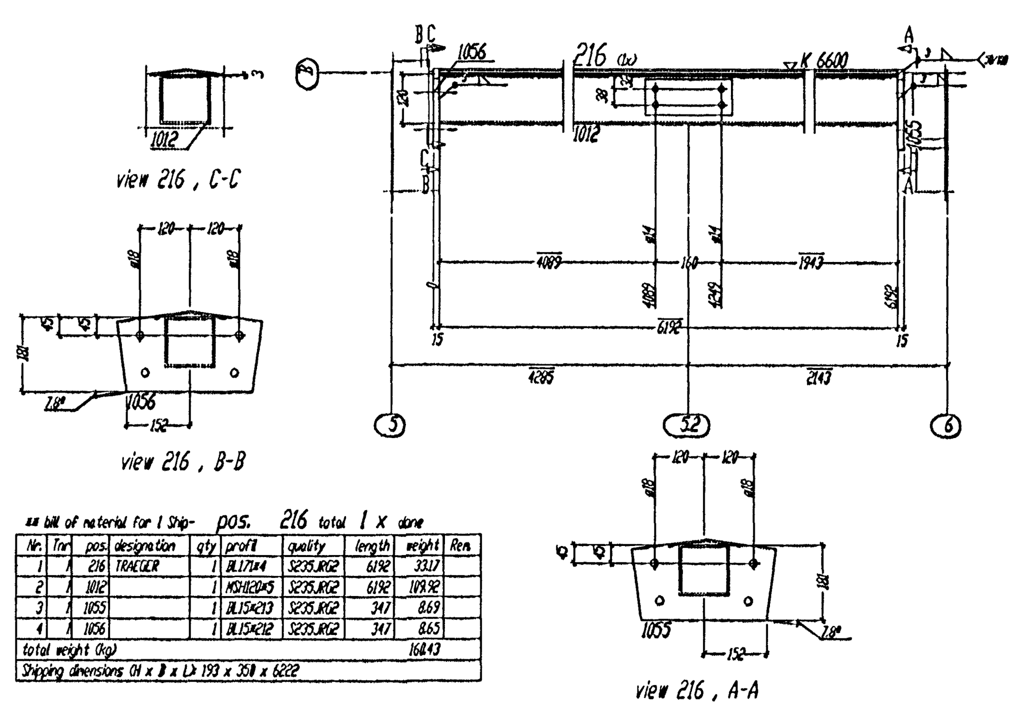

view 216 , C-C

view 216 , B-B

view 216 , A-A

** bill of material for 1 Ship- pos. 216 total 1 X done

| Nr. | Tnr | pos. | designation | qty | profil | quality | length | weight | Rem. |
|---|---|---|---|---|---|---|---|---|---|
| 1 | 1 | 216 | TRAEGER | 1 | BL171*4 | S235JRG2 | 6192 | 33.17 | |
| 2 | 1 | 1012 | | 1 | MSH120*5 | S235JRG2 | 6192 | 109.92 | |
| 3 | 1 | 1055 | | 1 | BL15*213 | S235JRG2 | 347 | 8.69 | |
| 4 | 1 | 1056 | | 1 | BL15*212 | S235JRG2 | 347 | 8.65 | |
| total weight (kg) | | | | | | | | 160.43 | |
| Shipping dimensions (H x B x L): 193 x 350 x 6222 | | | | | | | | | |

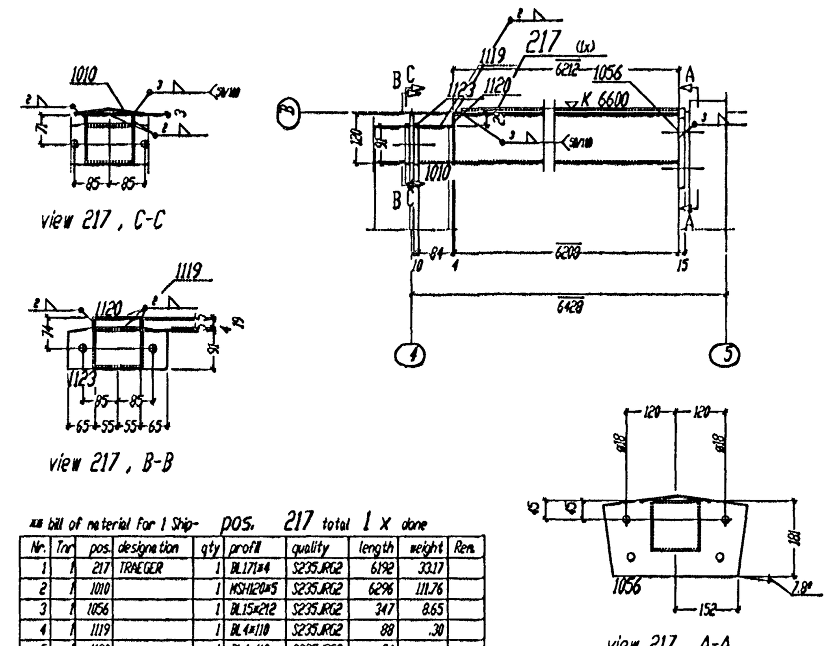

view 217 , C-C

view 217 , B-B

view 217 , A-A

** bill of material for 1 Ship- pos. 217 total 1 X done

| Nr. | Tnr | pos. | designation | qty | profil | quality | length | weight | Rem. |
|---|---|---|---|---|---|---|---|---|---|
| 1 | 1 | 217 | TRAEGER | 1 | BL171*4 | S235JRG2 | 6192 | 33.17 | |
| 2 | 1 | 1010 | | 1 | MSH120*5 | S235JRG2 | 6296 | 111.76 | |
| 3 | 1 | 1056 | | 1 | BL15*212 | S235JRG2 | 347 | 8.65 | |
| 4 | 1 | 1119 | | 1 | BL4*110 | S235JRG2 | 88 | .30 | |
| 5 | 1 | 1120 | | 1 | BL4*110 | S235JRG2 | 24 | | |
| 6 | 1 | 1123 | | 1 | BL10*100 | S235JRG2 | 240 | 1.88 | |
| total weight (kg) | | | | | | | | 155.85 | |
| Shipping dimensions (H x B x L): 193 x 350 x 6321 | | | | | | | | | |

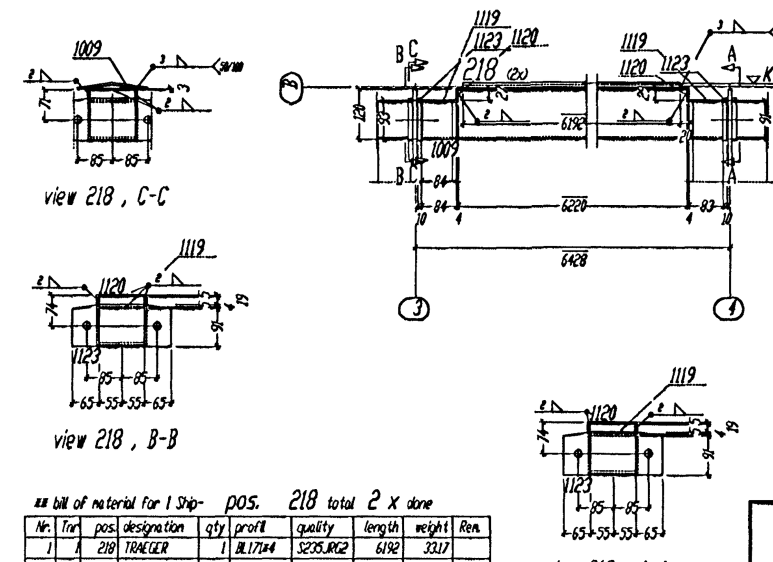

view 218 , C-C

view 218 , B-B

view 218 , A-A

** bill of material for 1 Ship- pos. 218 total 2 X done

| Nr. | Tnr | pos. | designation | qty | profil | quality | length | weight | Rem. |
|---|---|---|---|---|---|---|---|---|---|
| 1 | 1 | 218 | TRAEGER | 1 | BL171*4 | S235JRG2 | 6192 | 33.17 | |
| 2 | 1 | 1009 | | 1 | MSH120*5 | S235JRG2 | 6396 | 113.53 | |
| 3 | 1 | 1119 | | 2 | BL4*110 | S235JRG2 | 88 | .61 | |
| 4 | 1 | 1120 | | 2 | BL4*110 | S235JRG2 | 24 | .17 | |
| 5 | 1 | 1123 | | 2 | BL10*100 | S235JRG2 | 240 | 3.77 | |
| total weight (kg) | | | | | | | | 151.25 | |
| Shipping dimensions (H x B x L): 137 x 240 x 6415 | | | | | | | | | |

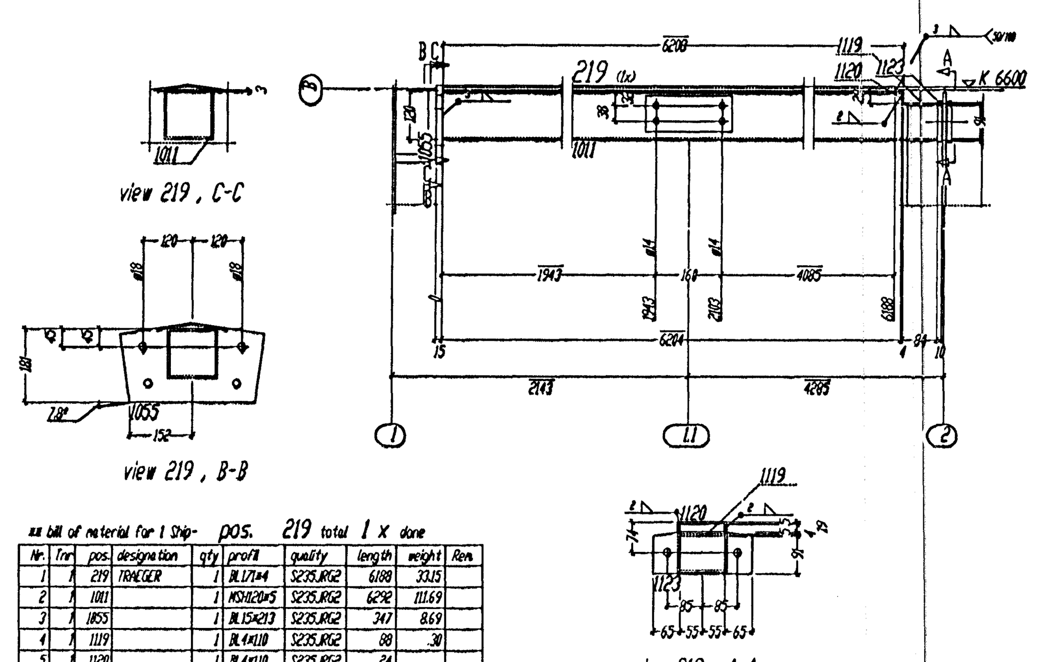

view 219 , C-C

view 219 , B-B

view 219 , A-A

** bill of material for 1 Ship- pos. 219 total 1 X done

| Nr. | Tnr | pos. | designation | qty | profil | quality | length | weight | Rem. |
|---|---|---|---|---|---|---|---|---|---|
| 1 | 1 | 219 | TRAEGER | 1 | BL171*4 | S235JRG2 | 6188 | 33.15 | |
| 2 | 1 | 1011 | | 1 | MSH120*5 | S235JRG2 | 6292 | 111.69 | |
| 3 | 1 | 1055 | | 1 | BL15*213 | S235JRG2 | 347 | 8.69 | |
| 4 | 1 | 1119 | | 1 | BL4*110 | S235JRG2 | 88 | .30 | |
| 5 | 1 | 1120 | | 1 | BL4*110 | S235JRG2 | 24 | | |
| 6 | 1 | 1123 | | 1 | BL10*100 | S235JRG2 | 240 | 1.88 | |
| total weight (kg) | | | | | | | | 155.80 | |
| Shipping dimensions (H x B x L): 193 x 350 x 6317 | | | | | | | | | |

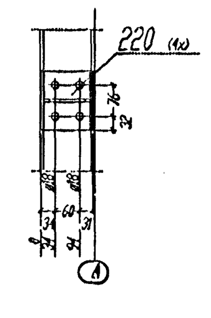

** bill of material for 1 Ship- pos. 220 total 4 X done

| Nr. | Tnr | pos. | designation | qty | profil | quality | length | weight | Rem. |
|---|---|---|---|---|---|---|---|---|---|
| 1 | 1 | 220 | FUTTER | 1 | BL2*140 | S235JRG2 | 125 | .27 | |

Byggingafulltrúi Hafnarfjarðar
Afgreitt þann
03 ... 2005

Tolerance for welded constructions According to DIN 8570, Pt.1+3/B+F,10.87

Welding ( V P S ) according to DIN-EN 288 - 2

All unmarked welds to be fillet continuous a=4mm thick, not greater than 0.7 d of the thinner element

The material for cap plates >20 mm thick to be examined for laminations

Required torques,prestressing forces and forced tension angles according to DIN 18800 Pt. 7, 05.83

| | 1 | 2 | 3 | 4 | 5 | | | 6 | | |
|---|---|---|---|---|---|---|---|---|---|---|
| | | | Prestressing of HV bolts (Class 10.9) according to | | | | | | | |
| | | Required compressing force | a) Torque techniques | | b) Impulse technique | | | c) Angle of rotation techniques | | |
| | Bolts | | Manual torque wrench: Required grip rotary moment | | Mechanical impact wrench: Req. compressing force | Required tightening torque | | Grip length lk | Angle of rotation | Rot. measure |
| | | Fv | Lubricated MoS2 1) | Slightly oiled | Fv 2) | Mv 2) | | | phi | U |
| | | kN | Nm | Nm | kN | Nm | | mm | | |
| 1 | M12 | 50 | 100 | 120 | 60 | 10 | M12 to M22 | lk ≤ 50 | 180 | 1/2 |
| 2 | M16 | 100 | 250 | 350 | 110 | 50 | | 51 ≤ lk ≤ 100 | 240 | 2/3 |
| 3 | M20 | 160 | 450 | 600 | 175 | | | 101 ≤ lk ≤ 170 | 270 | 3/4 |
| 4 | M22 | 190 | 650 | 900 | 210 | 100 | | 171 ≤ lk ≤ 240 | 360 | 1 |
| 5 | M24 | 220 | 800 | 1100 | 240 | | M24 to M36 | lk ≤ 50 | 180 | 1/2 |
| 6 | M27 | 290 | 1250 | 1650 | 320 | 200 | | 51 ≤ lk ≤ 100 | 240 | 2/3 |
| 7 | M30 | 350 | 1650 | 2200 | 390 | | | 101 ≤ lk ≤ 240 | 270 | 3/4 |
| 8 | M36 | 510 | 2800 | 3300 | 560 | | | | | |

1) Due to the great dependence of the Mv value on the type of lubricant adhere to the bolt manufacturer's recommendations.
2) Independently on the lubricant of the threads and surfaces of bolts and nuts. CAUTION For hot galvanized HV bolts use values from column 3.

Samþ. Jón ...

Sveinbjörn Hinriksson
Byggingatæknifræðingur
Kt. 160851-2529
Brekkugötu 8 Hafnarfirði
Sími: 555-4008, 861-9851
Netfang: svennih@internet.is

| | | | | |
|---|---|---|---|---|
| Staður | Rauðhella 13 Hafnarfirði | | | |
| Skýring | Stálvirki | | | |
| Hannað / Teiknað | Kvarði | Dagsetning | Verknr. | Teikn.nr. |
| | 1:15 | 31.10.05 | 12-05 | 1-14 |