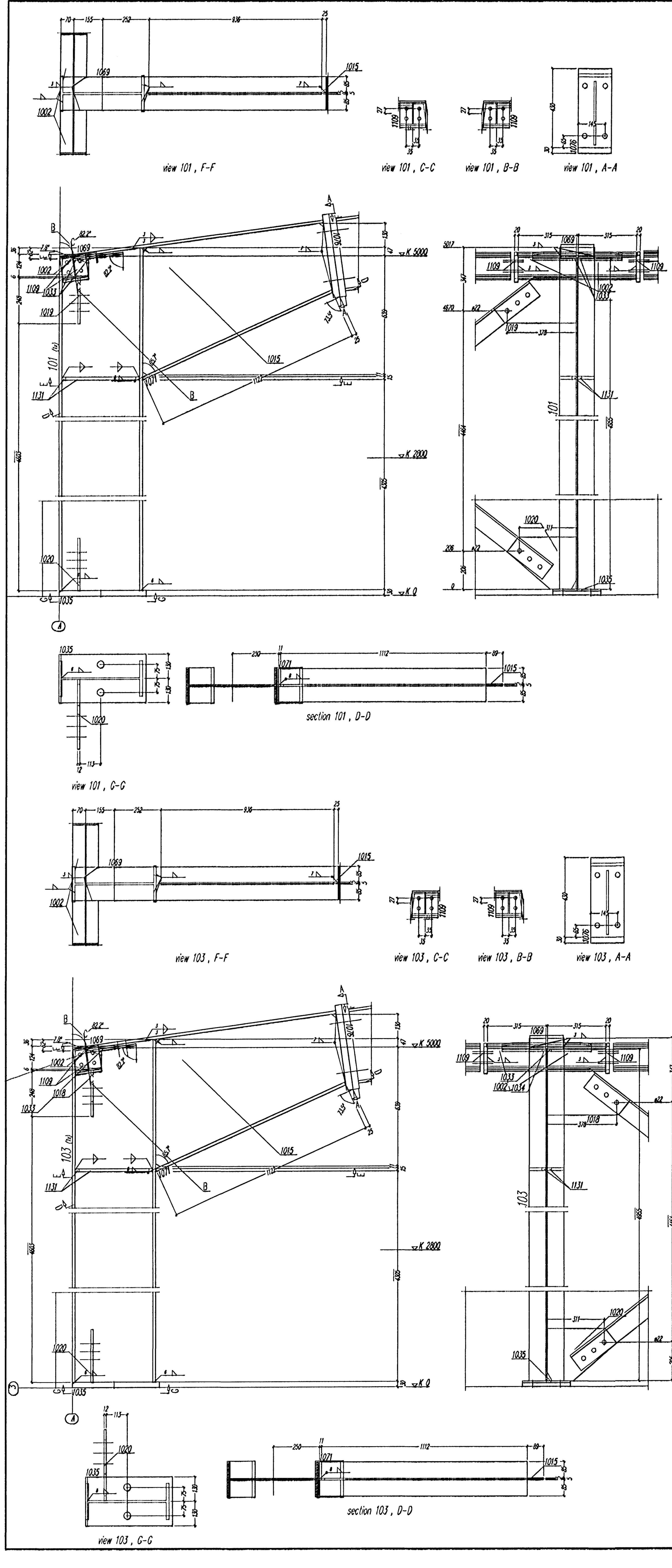

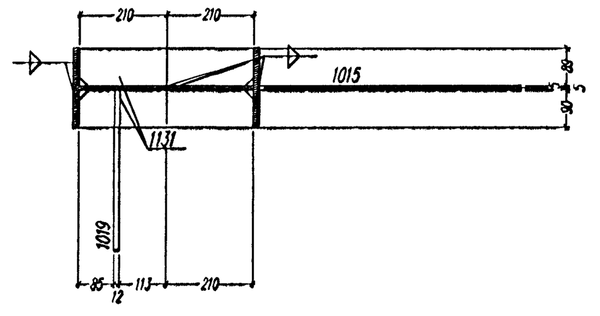

section 101 , E-E

** bill of material for 1 Ship- pos. 101 total 1 x done

Nr.	Tnr	pos.	designation	qty	profil	quality	length	weight	Rem.
1	1	101		1	IPE450	S235JRG2	5017	389.28	
2	1	1002		2	HEA140	S235JRG2	315	15.58	
3	1	1015	STEGBLECH	1	BL10*682	S235JRG2	1077	57.66	
4	1	1019	KNOTENBLECH	1	BL12*447	S235JRG2	248	10.43	
5	1	1020	KNOTENBLECH	1	BL12*374	S235JRG2	280	9.86	
6	1	1033		2	BL10*270	S235JRG2	237	10.04	
7	1	1035		1	BL30*260	S235JRG2	470	28.78	
8	1	1069	PLATTE	1	BL15*180	S235JRG2	1438	30.47	
9	1	1071	PLATTE	1	BL15*180	S235JRG2	1122	23.79	
10	1	1076	PLATTE	1	BL35*180	S235JRG2	460	22.75	
11	1	1109	PLATTE	2	FL140*20	S235JRG2	145	6.37	
12	1	1131	RIPPE	2	BL15*90	S235JRG2	420	8.87	
total weight (kg)								613.88	
Shipping dimensions (H x B x L): 1517 x 791 x 5230									

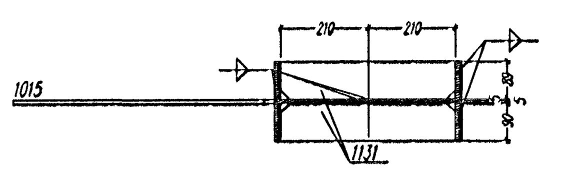

section 102 , E-E

** bill of material for 1 Ship- pos. 102 total 1 x done

Nr.	Tnr	pos.	designation	qty	profil	quality	length	weight	Rem.
1	1	102		1	IPE450	S235JRG2	5017	389.28	
2	1	1002		2	HEA140	S235JRG2	315	15.58	
3	1	1015	STEGBLECH	1	BL10*682	S235JRG2	1077	57.66	
4	1	1033		2	BL10*270	S235JRG2	237	10.04	
5	1	1035		1	BL30*260	S235JRG2	470	28.78	
6	1	1069	PLATTE	1	BL15*180	S235JRG2	1438	30.47	
7	1	1071	PLATTE	1	BL15*180	S235JRG2	1122	23.79	
8	1	1076	PLATTE	1	BL35*180	S235JRG2	460	22.75	
9	1	1110	PLATTE	2	FL140*20	S235JRG2	145	6.37	
10	1	1131	RIPPE	2	BL15*90	S235JRG2	420	8.87	
total weight (kg)								593.59	
Shipping dimensions (H x B x L): 1517 x 680 x 5230									

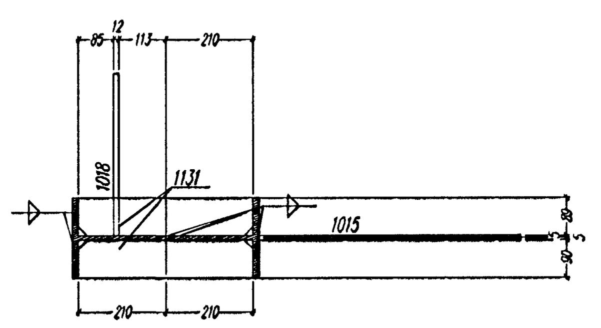

section 103 , E-E

** bill of material for 1 Ship- pos. 103 total 1 x done

Nr.	Tnr	pos.	designation	qty	profil	quality	length	weight	Rem.
1	1	103		1	IPE450	S235JRG2	5017	389.28	
2	1	1002		2	HEA140	S235JRG2	315	15.58	
3	1	1015	STEGBLECH	1	BL10*682	S235JRG2	1077	57.66	
4	1	1018	KNOTENBLECH	1	BL12*447	S235JRG2	248	10.43	
5	1	1020	KNOTENBLECH	1	BL12*374	S235JRG2	280	9.86	
6	1	1033		1	BL10*270	S235JRG2	237	5.02	
7	1	1034		1	BL10*270	S235JRG2	237	5.02	
8	1	1035		1	BL30*260	S235JRG2	470	28.78	
9	1	1069	PLATTE	1	BL15*180	S235JRG2	1438	30.47	
10	1	1071	PLATTE	1	BL15*180	S235JRG2	1122	23.79	
11	1	1076	PLATTE	1	BL35*180	S235JRG2	460	22.75	
12	1	1109	PLATTE	2	FL140*20	S235JRG2	145	6.37	
13	1	1131	RIPPE	2	BL15*90	S235JRG2	420	8.87	
total weight (kg)								613.88	
Shipping dimensions (H x B x L): 1517 x 791 x 5230									

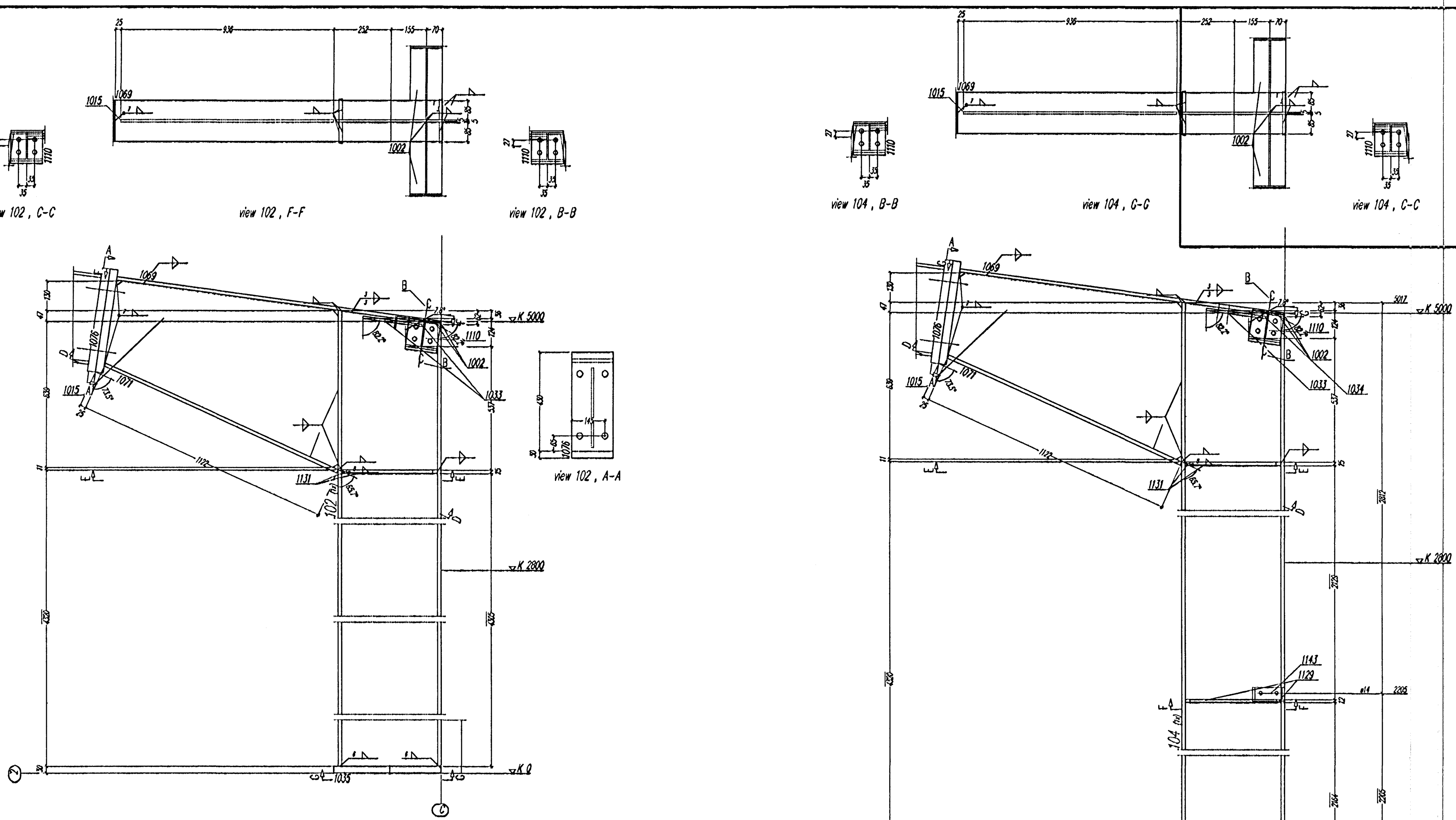

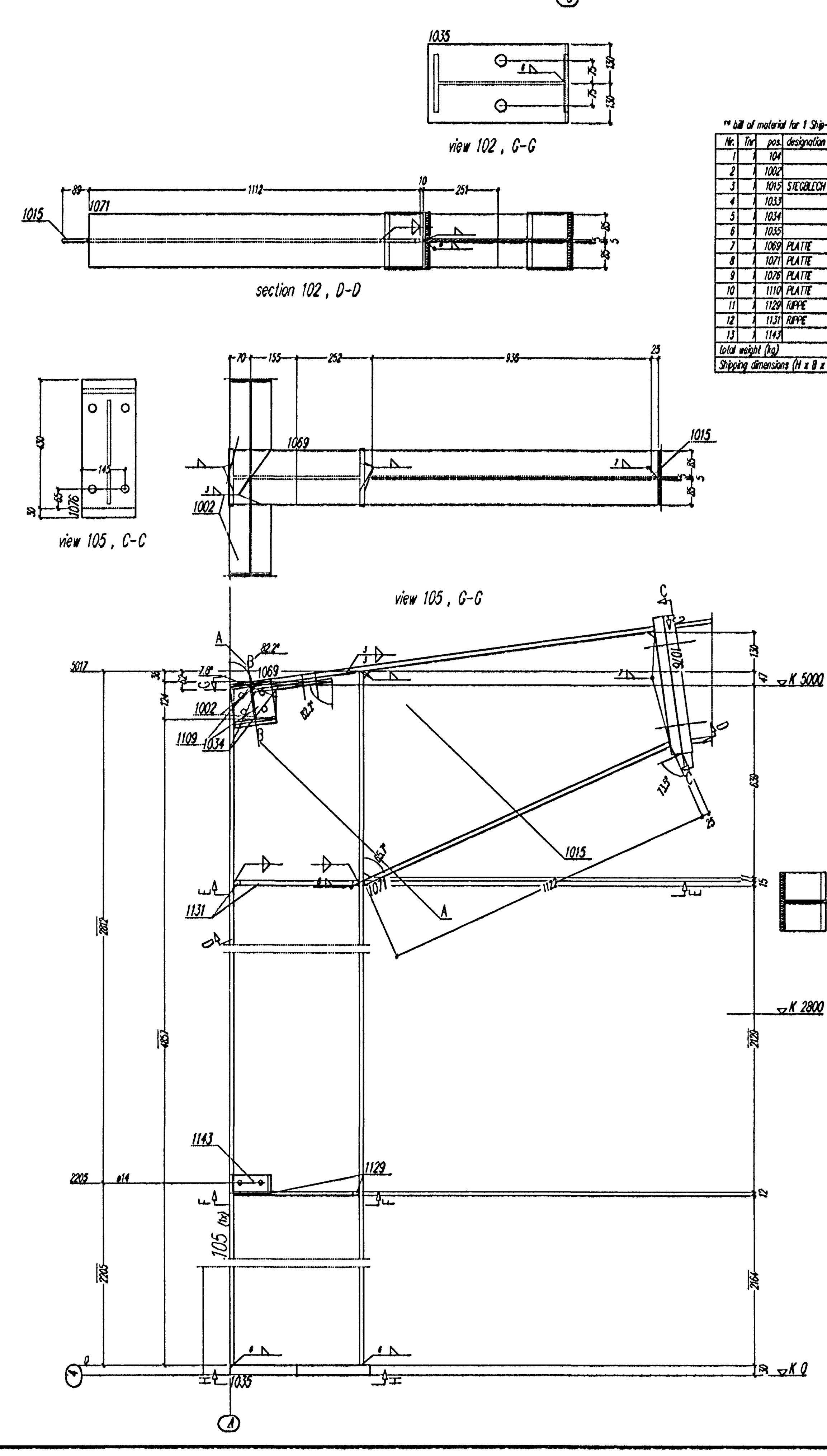

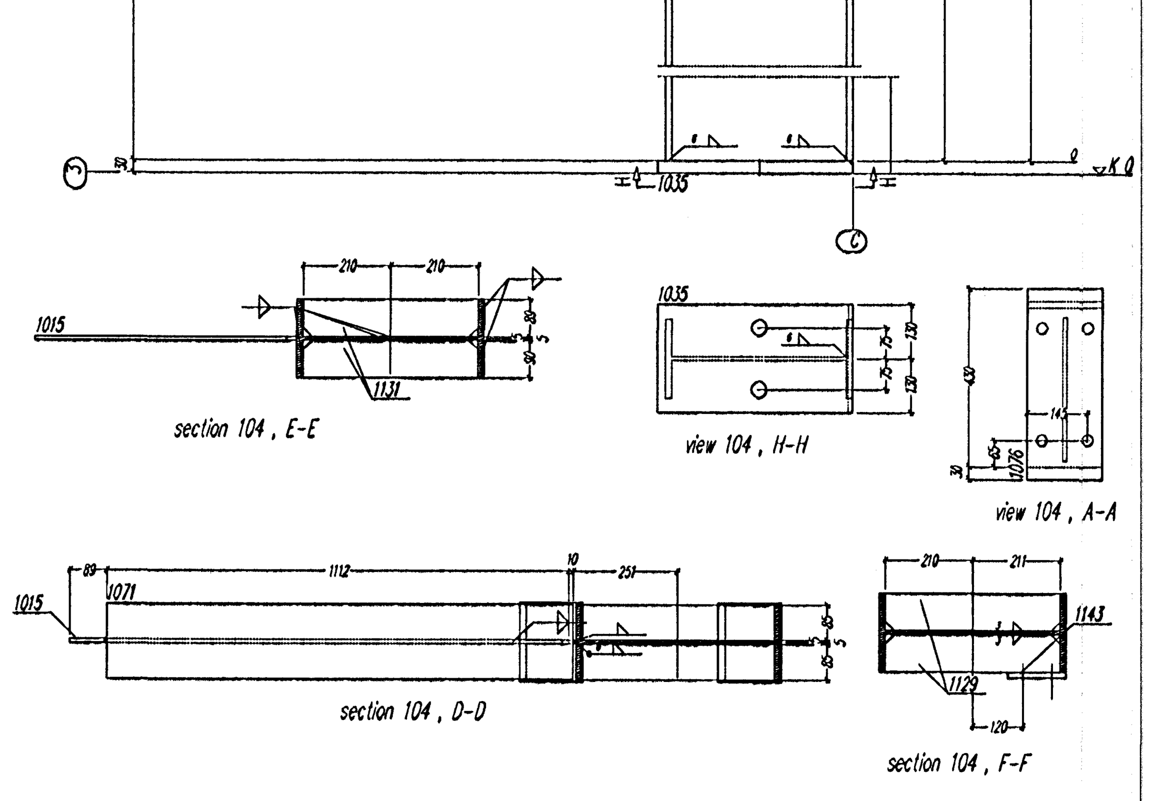

** bill of material for 1 Ship- pos. 104 total 1 x done

Nr.	Tnr	pos.	designation	qty	profil	quality	length	weight	Rem.
1	1	104		1	IPE450	S235JRG2	5017	389.28	
2	1	1002		2	HEA140	S235JRG2	315	15.58	
3	1	1015	STEGBLECH	1	BL10*682	S235JRG2	1077	57.66	
4	1	1033		1	BL10*270	S235JRG2	237	5.02	
5	1	1034		1	BL10*270	S235JRG2	237	5.02	
6	1	1035		1	BL30*260	S235JRG2	470	28.78	
7	1	1069	PLATTE	1	BL15*180	S235JRG2	1438	30.47	
8	1	1071	PLATTE	1	BL15*180	S235JRG2	1122	23.79	
9	1	1076	PLATTE	1	BL35*180	S235JRG2	460	22.75	
10	1	1110	PLATTE	2	FL140*20	S235JRG2	145	6.37	
11	1	1129	RIPPE	2	BL12*90	S235JRG2	421	7.14	
12	1	1131	RIPPE	2	BL15*90	S235JRG2	420	8.87	
13	1	1143		1	FL60*12	S235JRG2	140	.79	
total weight (kg)								601.52	
Shipping dimensions (H x B x L): 1517 x 680 x 5230									

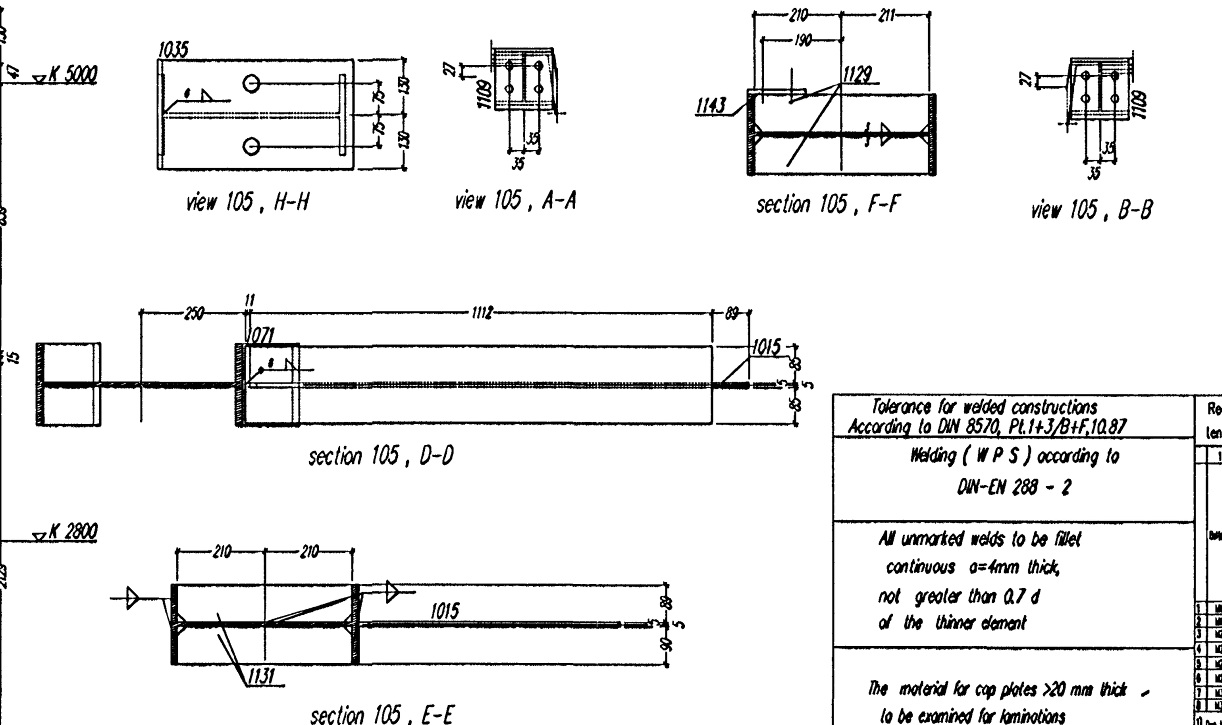

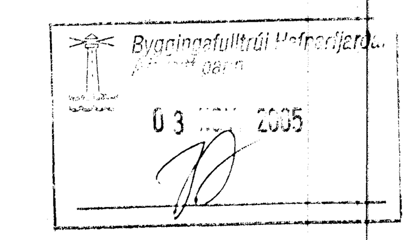

** bill of material for 1 Ship- pos. 105 total 1 x done

Nr.	Tnr	pos.	designation	qty	profil	quality	length	weight	Rem.
1	1	105		1	IPE450	S235JRG2	5017	389.28	
2	1	1002		2	HEA140	S235JRG2	315	15.58	
3	1	1015	STEGBLECH	1	BL10*682	S235JRG2	1077	57.66	
4	1	1034		2	BL10*270	S235JRG2	237	10.04	
5	1	1035		1	BL30*260	S235JRG2	470	28.78	
6	1	1069	PLATTE	1	BL15*180	S235JRG2	1438	30.47	
7	1	1071	PLATTE	1	BL15*180	S235JRG2	1122	23.79	
8	1	1076	PLATTE	1	BL35*180	S235JRG2	460	22.75	
9	1	1109	PLATTE	2	FL140*20	S235JRG2	145	6.37	
10	1	1129	RIPPE	2	BL12*90	S235JRG2	421	7.14	
11	1	1131	RIPPE	2	BL15*90	S235JRG2	420	8.87	
12	1	1143		1	FL60*12	S235JRG2	140	.79	
total weight (kg)								601.52	
Shipping dimensions (H x B x L): 1517 x 680 x 5230									

Byggingafulltrúi Hafnarfjarðar
03 [illegible] 2005

Tolerance for welded constructions According to DIN 8570, Pt.1+3/B+F,10.87

Welding (W P S) according to DIN-EN 288 - 2

All unmarked welds to be fillet continuous a=4mm thick, not greater than 0.7 d of the thinner element

The material for cap plates >20 mm thick to be examined for laminations

Required torques,prestressing forces and forced tension angles according to DIN 18800 Pt. 7, 05.83

	1	2	3	4	5		6		
	Bolts	Required compressing force Fv (kN)	a) Torque technique, manual torque wrench, required grip rotary moment, lubricated MoS2 1) (Nm)	slightly oiled (Nm)	b) Impulse technique, mechanical impact wrench, req. compressing force Fv 2) (kN)	c) Angle of rotation technique: required tightening torque MA 2) (Nm)	Grip length lk (mm)	Angle	Rot. measure U
1	M12	50	100	120	60	10	M12 to M22: lk < 50	180	1/2
2	M16	100	250	350	110	50	50 < lk < 100	240	2/3
3	M20	160	450	600	175		100 < lk < 170	270	3/4
4	M22	190	650	900	210	100	170 < lk < 240	360	1
5	M24	220	800	1100	240		M24 to M36: lk < 50	180	1/2
6	M27	290	1250	1650	320	200	50 < lk < 100	240	2/3
7	M30	350	1650	2200	380		100 < lk < 240	270	3/4
8	M36	510	2800	3300	500				

1) Due to the great dependence of the Ma value on the type of thread lubricant adhere to the bolt manufacturer's recommendations.
2) Independently on the lubricant of the threads and surfaces of bolts and nuts. CAUTION! For hot galvanized HV bolts use values from column 3.

Sveinbjörn Hinriksson Byggingatæknifræðingur Kt. 160851-2529 Brekkugötu 8 Hafnarfirði Sími: 555-4008, 861-9851 Netfang: svennih@internet.is	Staður: Rauðhella 13 Hafnarfirði	
	Skýring: Stálvirki	
Hannað / Teiknað	Kvarði: 1:15	Dagsetning: 31.10.05
	Verknr.: 12-05	Teikn.nr.: 1-07