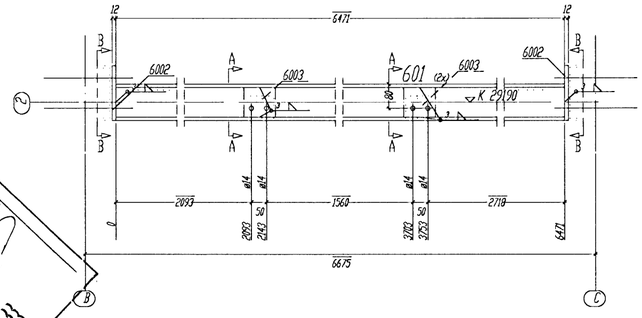

Byggingarleyfi hafnað á fundi Skipulags- og byggingarráðs 18 FEB 2008

** bill of material for 1 Ship- pos. 601 total 2 x done

Nr.	Trn	pos.	designation	qty	profil	quality	length	weight	Rem.
1	4	601		1	HE.B120	S355.J2G3	6471	172.78	
2	4	6002		2	BL12*180	S235.J2G3	260	8.82	
3	4	6003		2	BL10*98	S235.JR+2	105	1.62	
total weight (kg)								183.21	
Shipping dimensions (H x B x L): 180 x 260 x 6495									

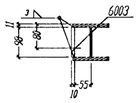

section 601 , A-A

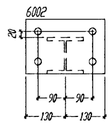

view 602 , B-B

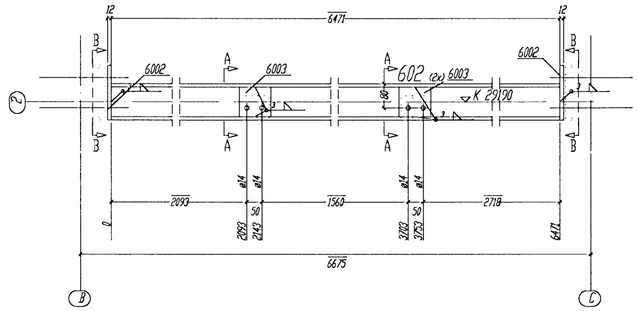

** bill of material for 1 Ship- pos. 602 total 2 x done

Nr.	Trn	pos.	designation	qty	profil	quality	length	weight	Rem.
1	4	602		1	HE.B120	S355.J2G3	6471	172.78	
2	4	6002		2	BL12*180	S235.J2G3	260	8.82	
3	4	6003		2	BL10*98	S235.JR+2	105	1.62	
total weight (kg)								183.21	
Shipping dimensions (H x B x L): 180 x 260 x 6495									

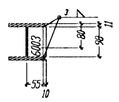

section 602 , A-A

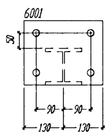

view 603 , C-C

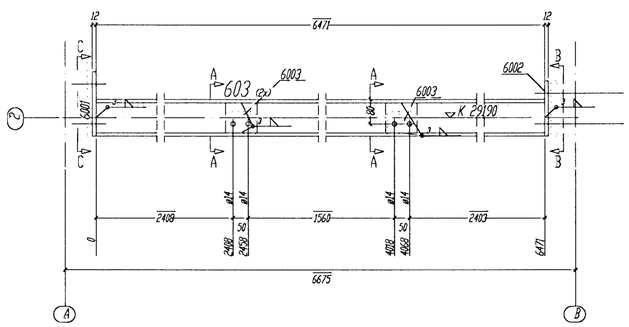

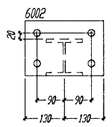

view 603 , B-B

** bill of material for 1 Ship- pos. 603 total 2 x done

Nr.	Trn	pos.	designation	qty	profil	quality	length	weight	Rem.
1	4	603		1	HE.B120	S355.J2G3	6471	172.78	
2	4	6001		1	BL12*210	S235.J2G3	260	5.14	
3	4	6002		1	BL12*180	S235.J2G3	260	4.41	
4	4	6003		2	BL10*98	S235.JR+2	105	1.62	
total weight (kg)								183.94	
Shipping dimensions (H x B x L): 210 x 260 x 6495									

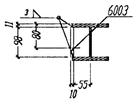

section 603 , A-A

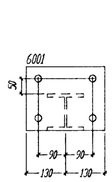

view 604 , C-C

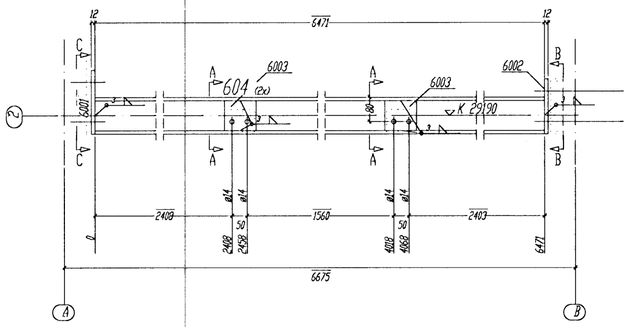

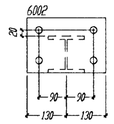

view 604 , B-B

** bill of material for 1 Ship- pos. 604 total 2 x done

Nr.	Trn	pos.	designation	qty	profil	quality	length	weight	Rem.
1	4	604		1	HE.B120	S355.J2G3	6471	172.77	
2	4	6001		1	BL12*210	S235.J2G3	260	5.14	
3	4	6002		1	BL12*180	S235.J2G3	260	4.41	
4	4	6003		2	BL10*98	S235.JR+2	105	1.62	
total weight (kg)								183.94	
Shipping dimensions (H x B x L): 210 x 260 x 6495									

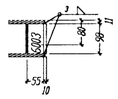

section 604 , A-A

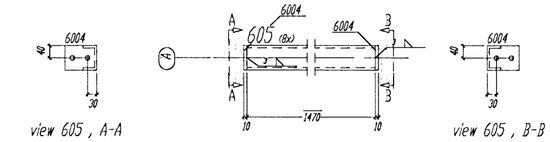

view 605 , A-A

view 605 , B-B

** bill of material for 1 Ship- pos. 605 total 8 x done

Nr.	Trn	pos.	designation	qty	profil	quality	length	weight	Rem.
1	4	605	TRAVERS	1	U80	S355.J2G3	1470	12.70	
2	4	6004		2	FL80*10	S235.JR+2	105	1.32	
total weight (kg)								14.02	
Shipping dimensions (H x B x L): 80 x 105 x 1490									

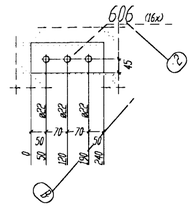

** bill of material for 1 Ship- pos. 606 total 16 x done

Nr.	Trn	pos.	designation	qty	profil	quality	length	weight	Rem.
1	4	606		1	FL100*12	S235.J2G3	240	2.26	

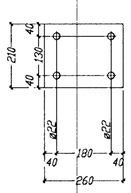

4 x Pos. 6001

BL12*210 - S235.J2G3..260

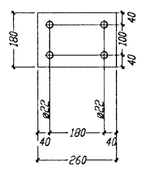

12 x Pos. 6002

BL12*180 - S235.J2G3..260

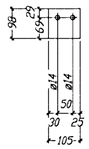

16 x Pos. 6003

BL10*98 ..105

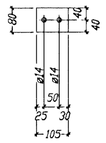

16 x Pos. 6004

FL80*10 ..105

Fyrir hönd Conís ehf, kt. 600105-1400 staðfestist að teikning þessi hefur verið yfirfarin. Teikningin er í samræmi við íslenska staðla og reglugerðir. 28/9'07

Nafn — Kennitala 130657-4139

Tolerance for welded constructions According to DIN 8570, Pt.1+3/B+F,10.87

Welding (W P S) according to DIN-EN 288 - 2

All unmarked welds to be fillet continuous a=4mm thick, not greater than 0.7 d of the thinner element

The material for cap plates >20 mm thick to be examined for laminations

Required torques,prestressing forces and forced tension angles according to DIN 18800 Pt. 7, 05.83

1	2	3	4	5	6				
Bolts	Required compressing force Fv	Prestressing of HV bolts (Class 10.9) according to a) Torque technique: Manual torque wrench, Required grip rotary moment (lubricated) MgD [1]	a) Torque technique: Mechanical impact wrench, Stiffly clad	b) Impulse technique: Req. compressing force Fv [2]	c) Angle of rotation technique: Required tightening torque MA [2]	Grip length lk		Angle of rotation	Rot. resistance
	kN	Nm	Nm	kN	Nm	mm			
1 M12	38	100	125	58	50	8 to 12		360	1/2
2 M16	100	250	310	110	120	12 to 16		240	2/3
3 M20	154	470	580	175	240	16 to 20		180	3/4
4 M22	190	630	790	210	300	17 to 22		360	1
5 M24	225	800	1000	245	420	8 to 12		360	1/2
6 M27	290	1250	1630	320	550	12 to 16		240	2/3
7 M30	350	1650	2080	390	750	16 to 20		180	3/4
8 M36	510	2900	3800	560	1300	17 to 22		360	1

[1] Due to the great dependence of the Mv value on the type of thread lubricant adhere to the bolt manufacturer's recommendations.
[2] Independently on the lubricant of the threads and surfaces of bolts and nuts.
CAUTION! For hot galvanized HV bolts use values from column 3.

BIURO INZYNIERSKIE
Marek i Janina MUCHA
Osiny, ul. Opolska 30a, 46-070 Komprachcice tel.077-46 46 757

	DATE	NAME	SIGNATURE
Designed by	03.08.2007	KRA.Tra	
Coupled by			
Verified by			

INDEX	CHANGES	DATE	NAME

1:40 SCALE

Pos.601-606

DESC.

TJARNARVELLIR 11
Steel- Storage house

DRAWING NO. DRG 301

SHEET 01