Samþykkt þann
24 JUNI 2008
Byggingarfulltrúinn í Hafnarfirði
F.h. Hrólfur S. Gunnlaugsso

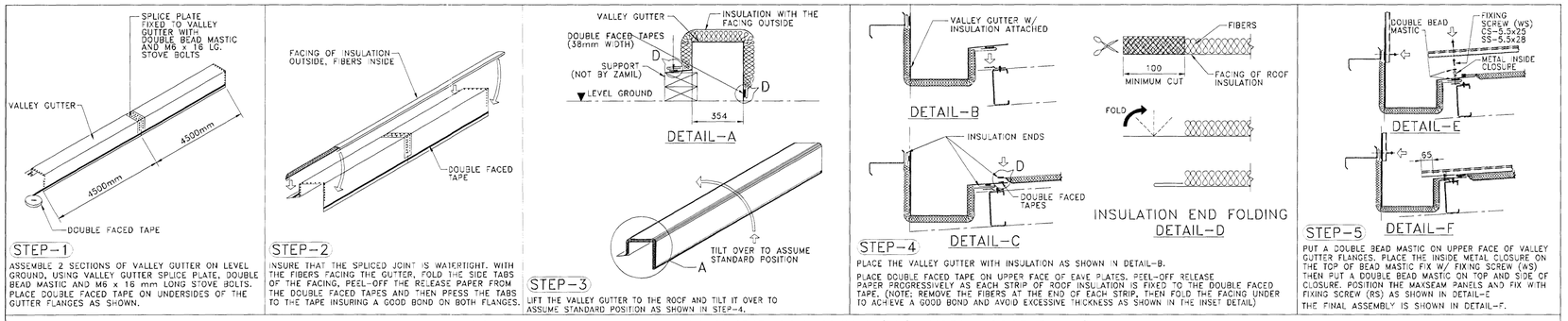

INSULATION INSTALLATION AT VALLEY GUTTER CONNECTION (W/MAXSEAM ROOF PANEL) (GUE-146)

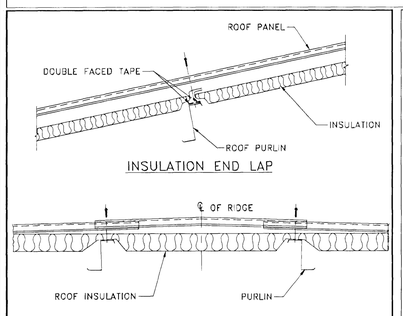

ROOF INSULATION DETAIL AT PURLIN (INE-009)

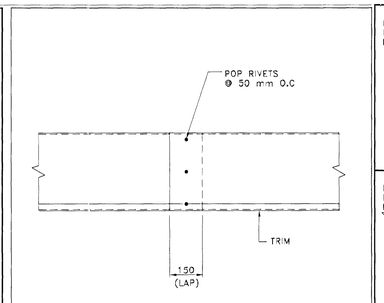

STANDARD LAP FOR TRIMS (TRE-010)

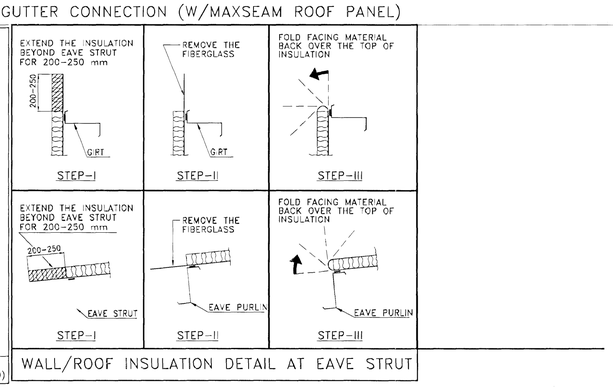

WALL/ROOF INSULATION DETAIL AT EAVE STRUT

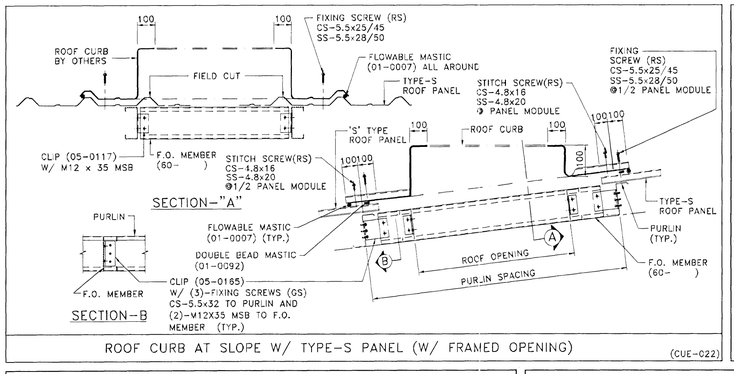

ROOF CURB AT SLOPE W/ TYPE-S PANEL (W/ FRAMED OPENING) (CUE-022)

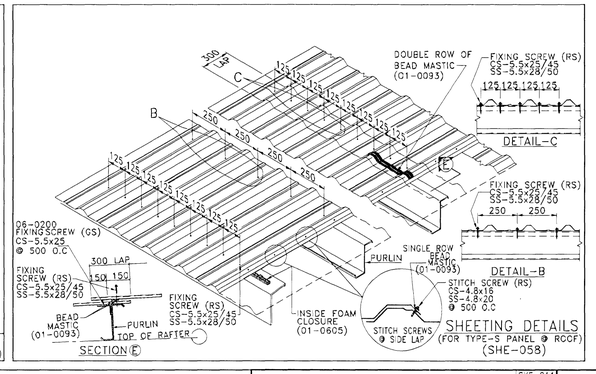

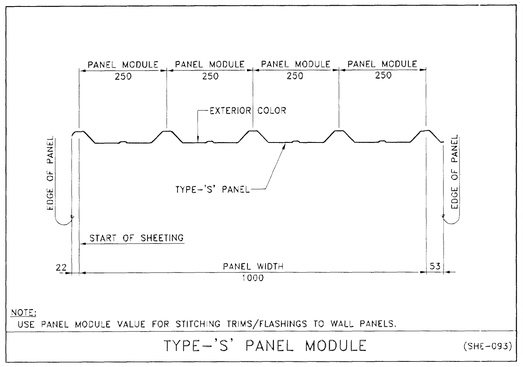

NOTE:
USE PANEL MODULE VALUE FOR STITCHING TRIMS/FLASHINGS TO WALL PANELS.

TYPE-'S' PANEL MODULE (SHE-093)

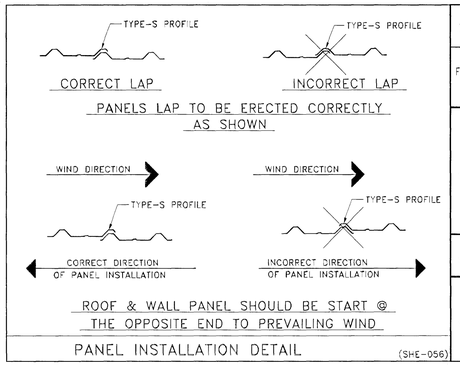

PANEL INSTALLATION DETAIL (SHE-056)

SELF DRILLING FASTENERS SCHEDULE @ ROOF (SYE-011)

FASTENER TYPE	USAGE	FASTENER PART NUMBER (CARBON STEEL "CS")
FIXING SCREWS	ROOF SCREW (RS)	CS-5.5x25 (01-0471)
		CS-5.5x45 (01-0472)
		CS-5.5x55 (01-0473)
STITCH SCREWS	ROOF SCREW (RS)	CS-4.8x16 (01-0470)
FIXING SCREWS	GENERAL SCREW (GS)	CS-5.5x25 (01-0481)
		CS-5.5x32 (01-0486)

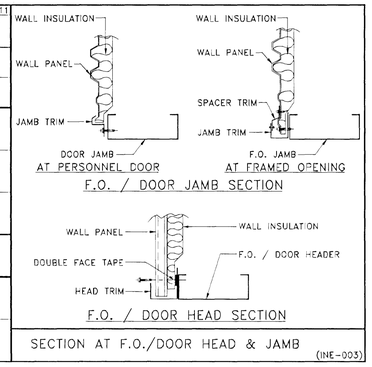

SECTION AT F.O./DOOR HEAD & JAMB (INE-003)

VST Verkfræðistofa Sigurðar Thoroddsen hf.
F.h. VST hf. Hjörtur Hansson 1509745-4929

ASK ARKITEKTAR ADALL OG SAMEIGINGARHÖNNUÐUR HELGI MÁR HALLDÓRSSON KT.301258-7049
26. maí 2008

NO.	DATE	DESCRIPTION	DRN	CHK	DSN
2	20.03.2008	ISSUED FOR CONSTRUCTION	NSK	TPS	IPC
1	24.11.2007	RE-ISSUED FOR APPROVAL	MGK	VRA	IPC
0	26.10.2007	ISSUED FOR APPROVAL	KRT	VRA	IPC

ZAMIL STEEL — ENGINEERING DEPARTMENT

ZS JOB NO. : V7-D567 BUILDING NO.: 01
PROJECT NAME : HEDINN HOUSE
CUSTOMER : HEDINN
JOBSITE LOCATION : HAFNAFIRDI, ICELAND
DRAWING TITLE :

ROOF SHEETING DETAILS

DRAWING NO. E47