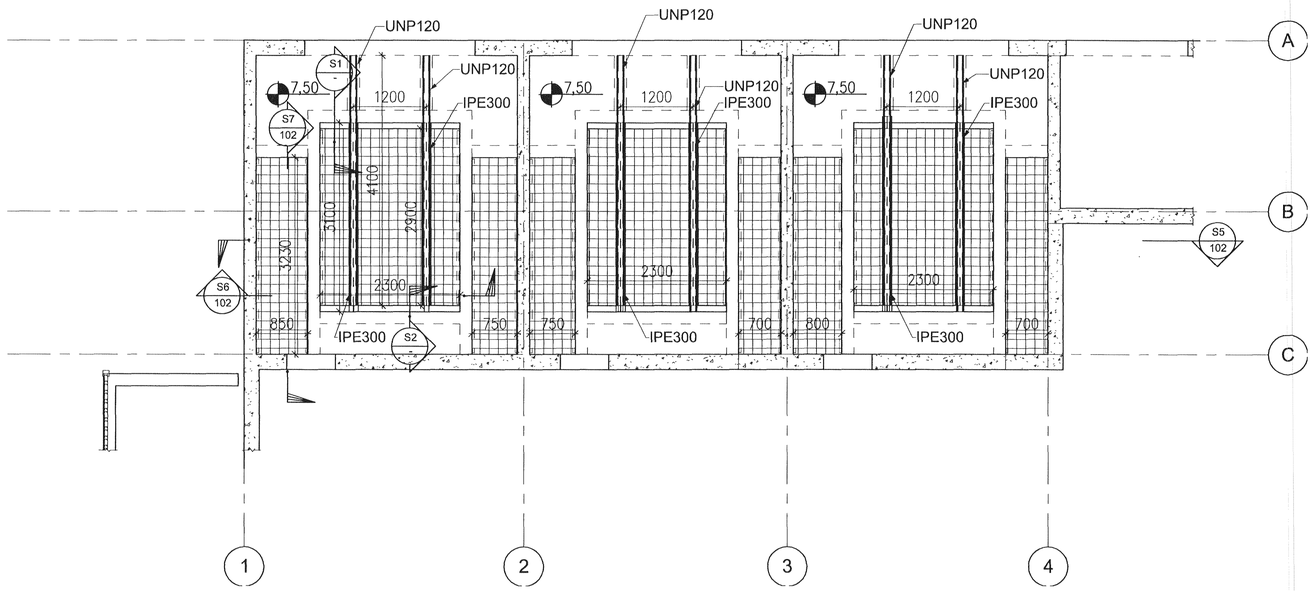

PLAN, LEVEL 7,50, 1:50

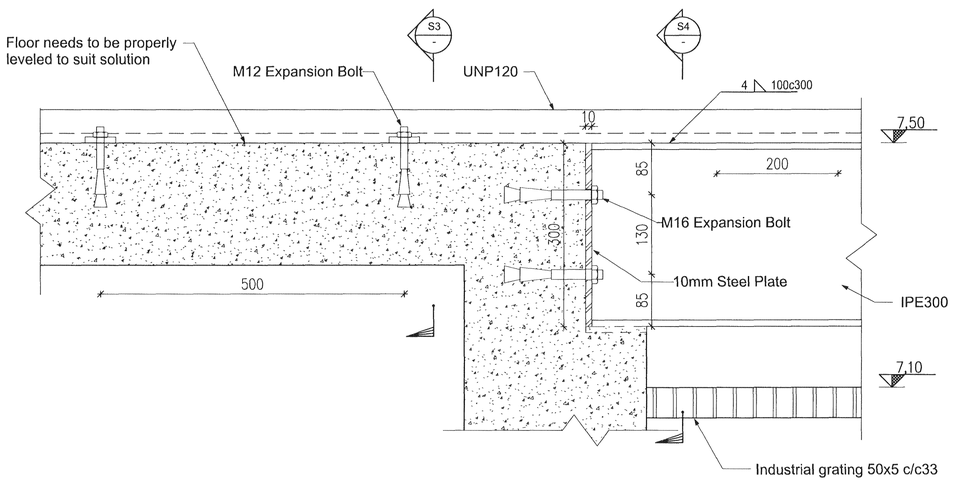

S1 SECTION 1:5

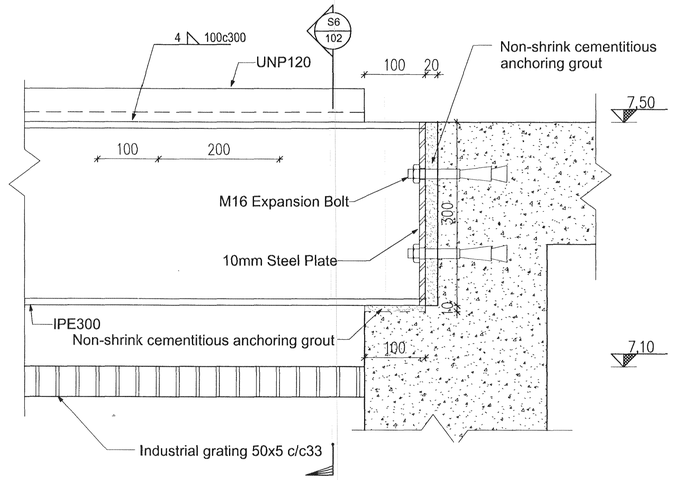

S2 SECTION 1:5

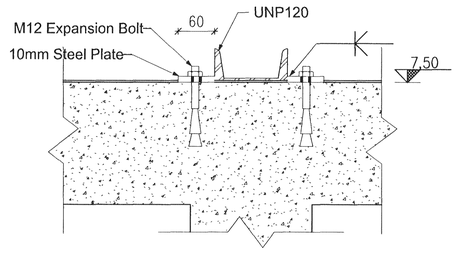

S3 SECTION 1:5

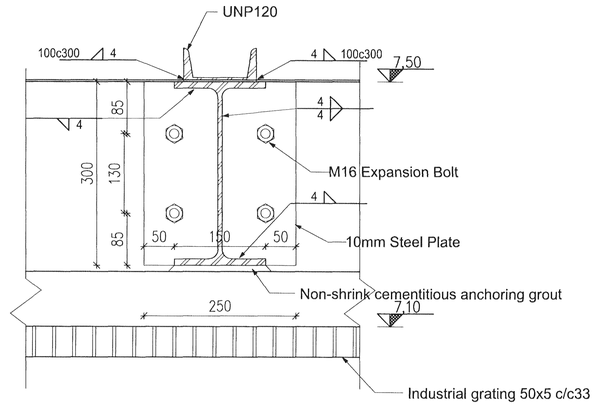

S4 SECTION 1:5

1:50 0 1000 5000mm

1:5 0 100 500mm

Samþykkt þann
04 JUL 2011
Byggingafulltrúinn í Hafnarfirði
F.h. Hrólfur S. Gunnlaugsson

Nich Indriðason
NI 131144-3949

Skýringar:
Legend:

Útg nr Rev no	Lýsing Description	Dagsetning Date	Han/Tkn Des/Drw	Yfirf Ckd	Notk heim Suppl Rel	Notk heim ISAL Rel
3	Issue for construction	2011.05.13	HFB/LDB	HjH	ÓS	

C:\HRV\IDP\01 IDP\200 – Utilities\210 Electical energy supply\Drawings\Civil\IDP-212-ZA-062-101.dwg

This drawing is the property of Rio Tinto Alcan Iceland Ltd. and handed out for personal use only. It may neither be copied nor made available to others without permission of Rio Tinto Alcan Iceland Ltd. The receiver is liable for any misuse.

Stærð: Format: A1 Mkv.: Scale: 1:50, 1:5
Dimensions without tolerances according to ISO 2768-1 medium.

HRV ENGINEERING

Dagsetning / Date: 2011.02.14
Hannað / Designed: HFB
Teikn / Drawn: HFB/ÁFV
Verktaki / Supplier: HRV
Teikn.nr.verktaka / Supplier drw.no.: IDP-212-ZA-062-101
Samþykkt / Approved: NI
Yfirf / Chkd: HjH
Hluti af: / Part of:

IPU 212 – SUBSTATION 140
CIVIL WORK
TRANSFORMERS RAILS AND BEAMS
Teg.teikningar / Dwg. type: STRUCTURAL STEEL

Rio Tinto Alcan
ISAL Alcan Iceland Ltd Straumsvík IS-222 Hafnarfjordur Iceland

Flokkur nr.: | Blað nr.: | Næsta bl.nr.:
Kostn.nr.-Ccno. / Bún.nr.-Eq.no: 5090
AKS
Teikn.nr. ISAL /Drw.no. of ISAL
Breyt./Rev.: C

ISAL Yfirfarið og skráð, dags / ISAL Checked, date
ISAL Samþykkt, dags / ISAL Approval, date