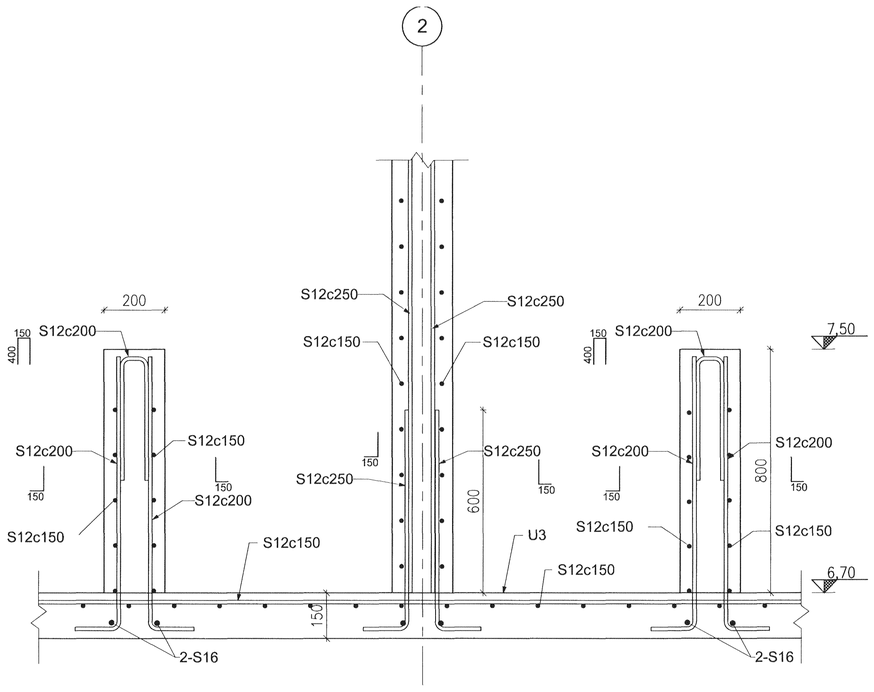

S4 SECTION 101 1:10

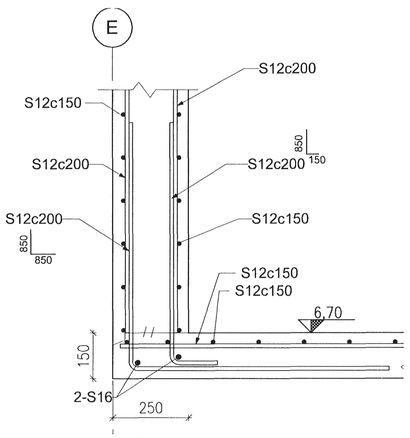

S5 SECTION 101 1:10

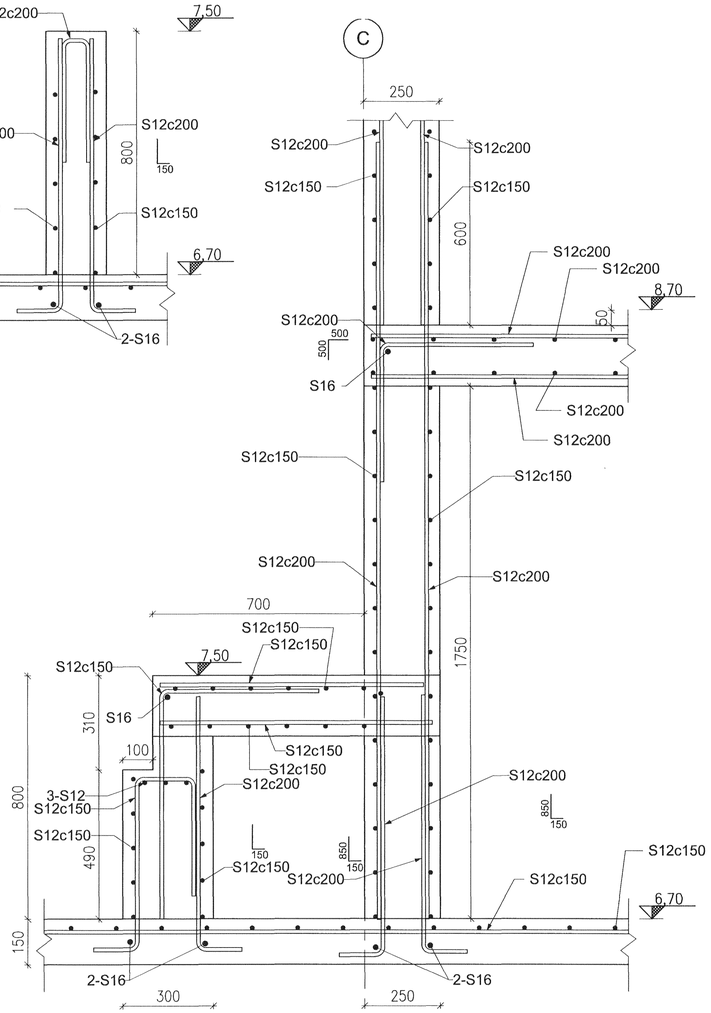

S6 SECTION 101 1:10

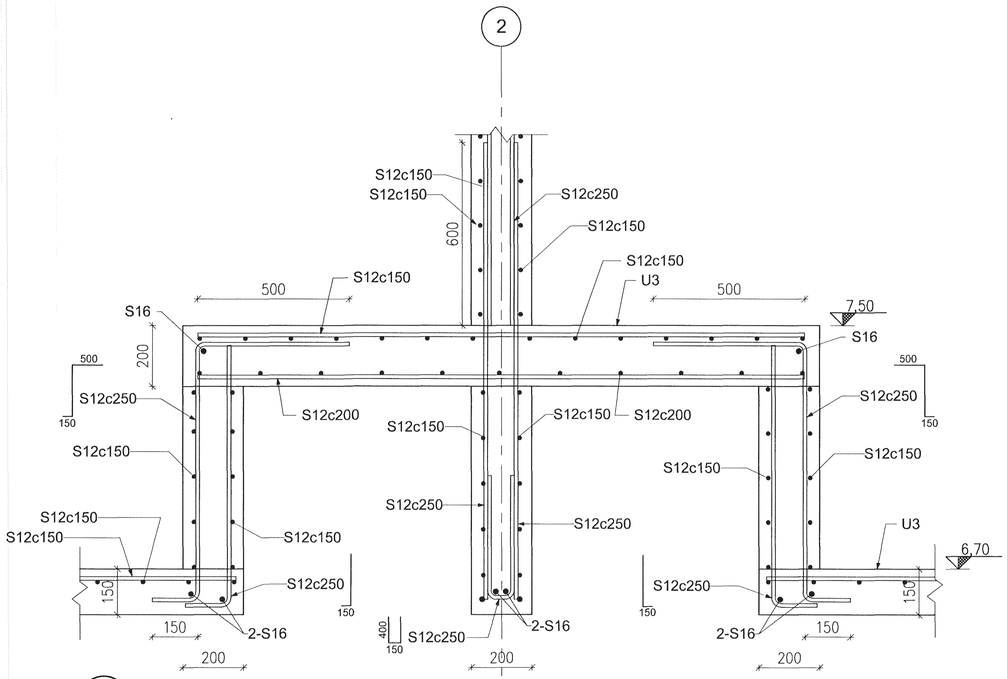

S7 SECTION 101 1:10

Samþykkt þann
04 JUL 2011
Byggingarfulltrúinn í Hafnarfirði
F.h. Hrólfur S. Gunnlaugsson

Nich Indriðason
NI 13144-3944

1:10 0 100 500 1000mm

Skýringar:
Legend:

Útg nr Rev no	Lýsing Description	Dagsetning Date	Hon/Tkn Des/Drw	Yfirf Chkd	Notk heim Suppl Rel	Notk heim ISAL Rel
3	Issue for construction	2011.05.13	HFB/LDB	HJH	ÓS	

This drawing is the property of Rio Tinto Alcan Iceland Ltd. and handed out for personal use only. It may neither be copied nor made available to others without permission of Rio Tinto Alcan Iceland Ltd. The receiver is liable for any misuse.

Starð: Format: A1 Mkv.: Scale: 1:10
Dimensions without tolerances according to ISO 2768-1 medium.

HRV ENGINEERING

Dagsetning / Date: 2011.02.14
Hannað / Designed: HFB
Teikn / Drawn: HFB/ÁFV
Verktaki / Supplier: HRV
Teikn.nr.verktaka / Supplier drw.no.: IDP-212-CA-062-103
Samþykkt / Approved: NI
Yfirf / Chkd: HJH
Hluti af: / Part of:

IPU 212 – SUBSTATION 140
CIVIL WORK
FOUNDATIONS AND SECTIONS
Teg.teikningar / Dwg. type: REINFORCEMENT

Rio Tinto Alcan
ISAL Alcan Iceland Ltd Straumsvík IS-222 Hafnarfjordur Iceland
ISAL Yfirfarið og skráð, dags / ISAL Checked, date
ISAL Samþykkt, dags / ISAL Approval, date

Flokkur nr.: Blað nr.: Nesta bl.nr.:
Kostn.nr.-Ccno. / Bún.nr.-Eq.no: 5090
AKS
Teikn.nr. ISAL /Drw.no. of ISAL
Breyt./Rev.: C

C:\HRV\IDP\01 IDP\200 – Utilities\210 Electical energy supply\Drawings\Civil\IDP-212-CA-062-103.dwg