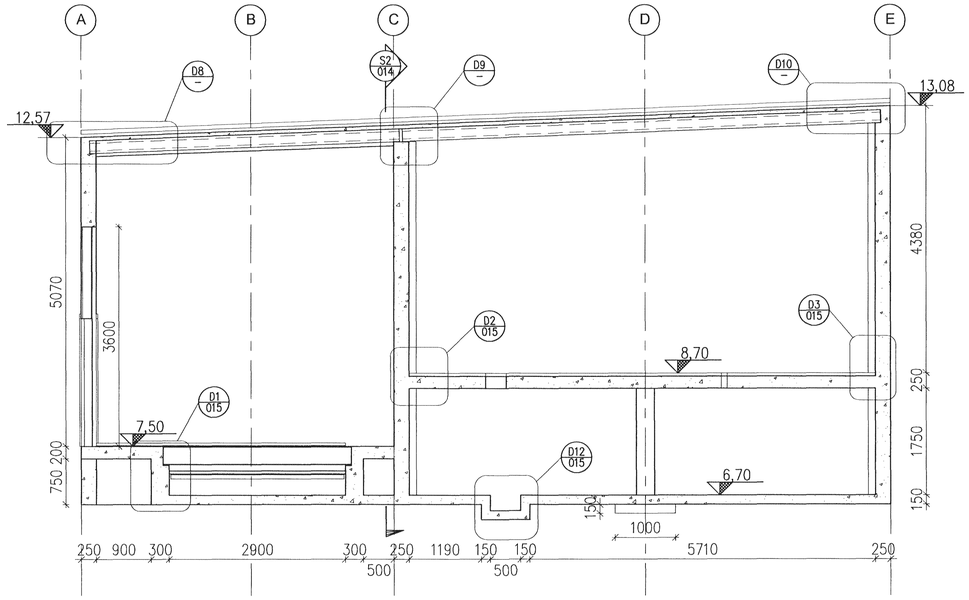

S1 011 SECTION 1:50

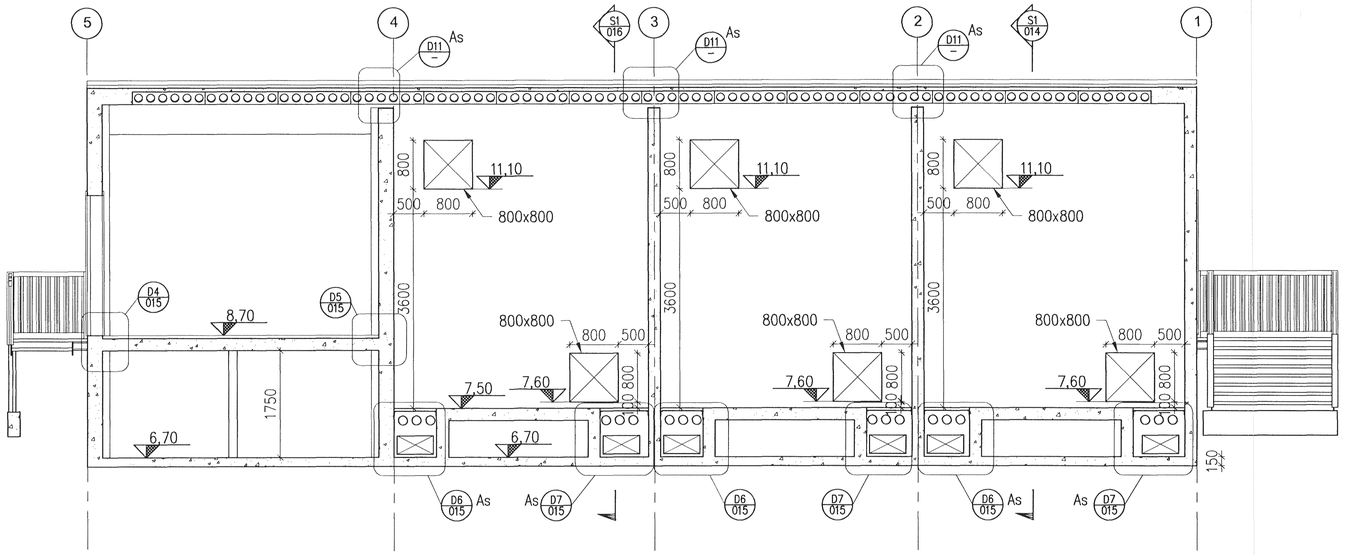

S2 011 SECTION 1:50

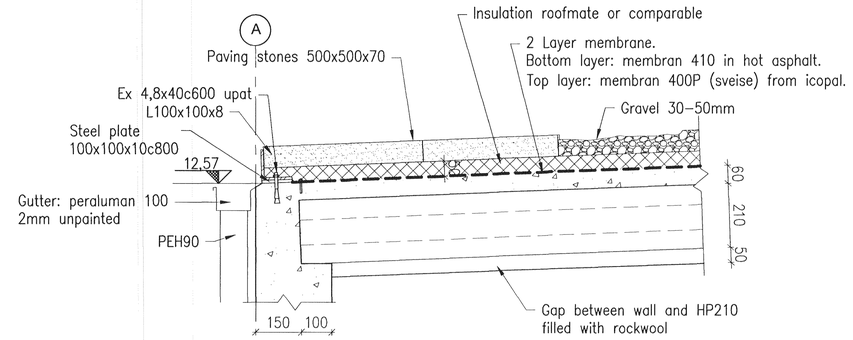

D8 – DETAIL 1:10

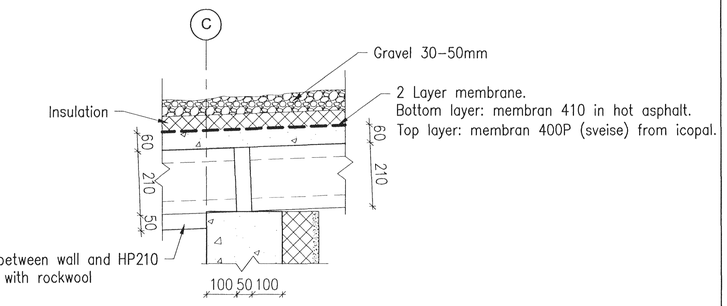

D9 – DETAIL 1:10

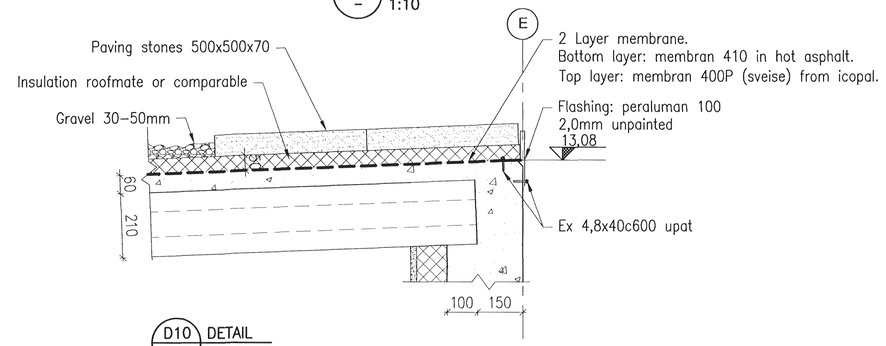

D10 – DETAIL 1:10

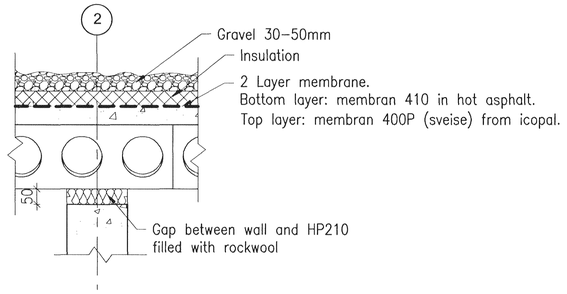

D11 – DETAIL 1:10

1:50 0 1000 5000mm

1:10 0 100 500 1000mm

Samþykkt þann
04 JUL 2011
Byggingafulltrúinn í Hafnarfirði
F.h. Hrólfur S. Gunnlaugsson

Nich Indriðason
NI 181144-3449

Skýringar:
Legend:

Útg nr Rev no	Lýsing Description	Dagsetning Date	Han/Tkn Des/Drw	Yfirf Ckd	Notk heim Suppl Rel	Notk heim ISAL Rel
3	Issue for construction	2011.05.13	HFB/LDB	HjH	ÓS	

This drawing is the property of Rio Tinto Alcan Iceland Ltd. and handed out for personal use only. It may neither be copied nor made available to others without permission of Rio Tinto Alcan Iceland Ltd. The receiver is liable for any misuse.

Stærð: Format: A1 Mkv.: Scale: 1:50, 1:10
Dimensions without tolerances according to ISO 2768-1 medium.

HRV ENGINEERING

Dagsetning / Date: 2011.02.14
Hannað / Designed: HFB
Teikn / Drawn: HFB/ÁFV
Verktaki / Supplier: HRV
Teikn.nr.verktaka / Supplier drw.no.: IDP-212-DA-062-014
Samþykkt / Approved: NI
Yfirf / Chkd: HjH
Hluti af: / Part of:

IPU 212 – SUBSTATION 140
GENERAL LAYOUT
SECTIONS AND DETAILS
Teg.teikningar / Dwg. type: FORMWORK

Rio Tinto Alcan
ISAL Alcan Iceland Ltd Straumsvik IS-222 Hafnarfjordur Iceland

Flokkur nr.: | Blað nr.: | Næsta bl.nr.:
Kostn.nr.–Cono. / Bún.nr.–Eq.no: 5090
AKS
Teikn.nr. ISAL /Drw.no. of ISAL
Breyt./Rev.: C

ISAL Yfirfarið og skráð, dags / ISAL Checked, date
ISAL Samþykkt, dags / ISAL Approval, date

C:\HRV\IDP\01 IDP\200 – Utilities\210 Electical energy supply\Drawings\Architectural\IDP-212-DA-062-014.dwg