CONNECTION	BOLT	QTY
A22-3	BSK24075	0,4 - 2,2
A32-1	BSK20075	2,2 - 2,2
BSK = DIN 6914 / 24075 = M 24 x 75		

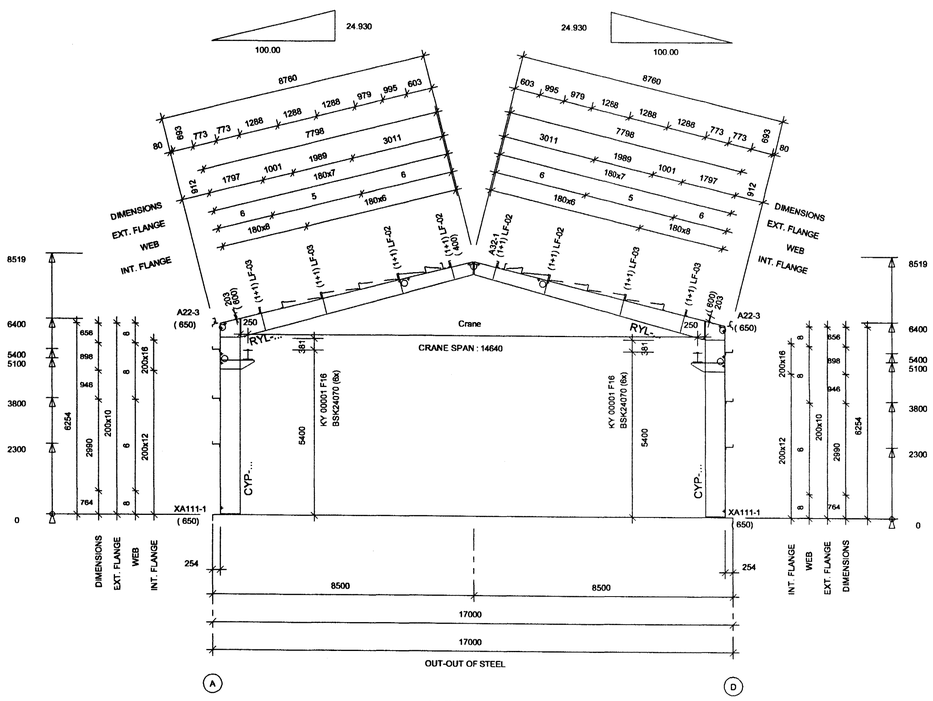

AXIS : 7+8

(SCALE:1/100)

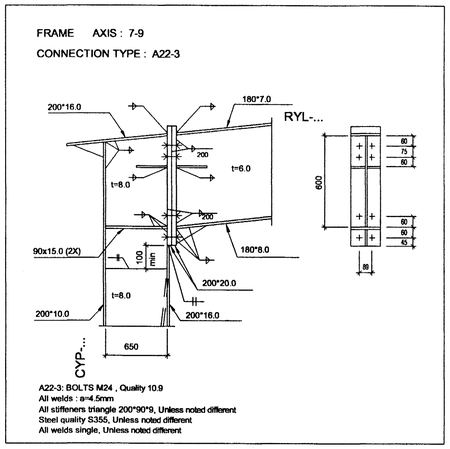

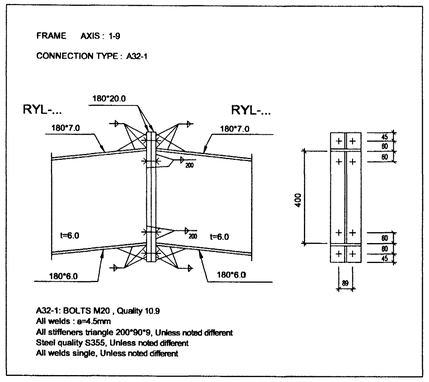

HV BOLTS:

MoS2 lubricate and prestress as follows
- M20 mit 450 Nm
- M24 mit 800 Nm

CONNECTION	BOLT	QTY
A22-3	BSK24075	0,4 - 2,2
A32-1	BSK20075	2,2 - 2,2
BSK = DIN 6914 / 24075 = M 24 x 75		

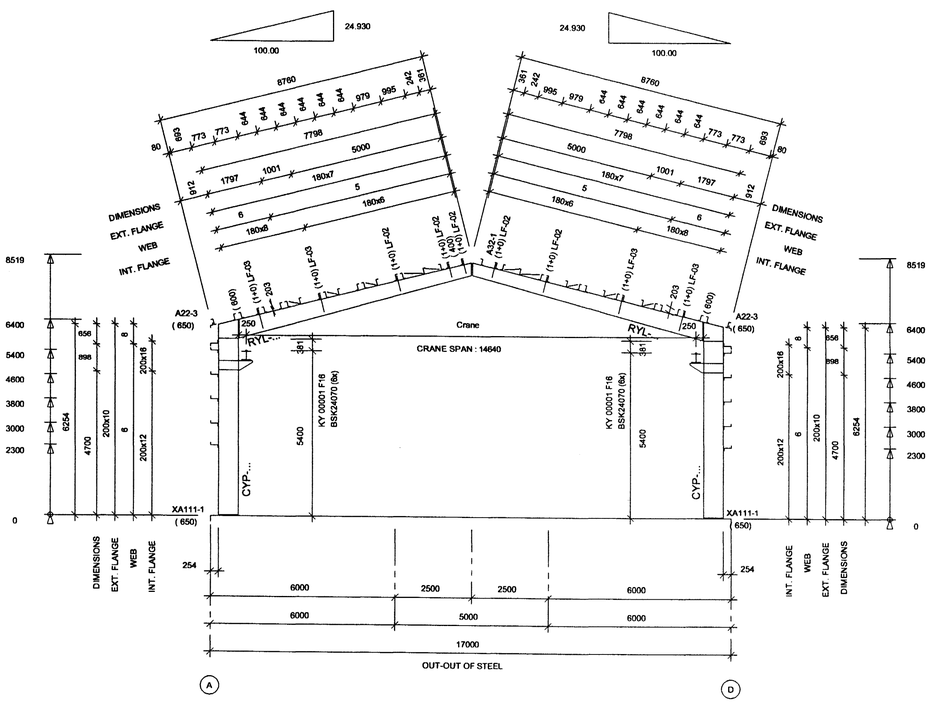

AXIS : 9

(SCALE:1/100)

K.Rafnsson Tæknibjónusta
Klapparstíg 20 • 101 Reykjavík
Kt. 220850-2189

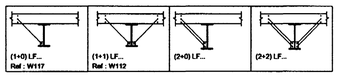

STD PROFILES DESCRIPTION LIST	NSTD PROFILES DESCRIPTION LIST
LF- : FLANGE BRACING 50*50*3.2	

TECHNICAL NOTES

1. Drawings to read in conjunction with ASTRON technical manual
2. All measures in millimeters
3. * = Field adapted
4. Design of foundations by local engineer
5. Applicable column reactions see chart "Foundation Reactions"
6. Purlin spacings are rounded to mm and cannot be added
7. Flange bracings installation per standard detail W1 chapter
8. Field locate roof openings and accessories
9. Compensation of panel tolerance currently during installation
10. Unless noted differently :
    1) Purlin diaphragms - At peak (see W316, W326, W327)
       - Double purlins (see W311, W321)
    2) Wind bracing details, see chapter W2
    3) Roof stabilisation if necessary :
       - Purlin spacers (HSA, HSB, HSC, HSD. SEE W37 AND W38)
       - Sag rods (RSG,...) see W6 and cross section
       - Tie straps (HC 250) see W7 chapter
11. Field cut and adapt girts and panels shown in overlap with an accessory element

Byggingafulltrúi Hafnarfjarðar
Afgreitt bann
20 NOV. 2002

This design is the property of ASTRON BUILDINGS, a Division of Parker Hannifin.
Copying and manufacturing components according to these drawings or calculations is illegal.

DET: A22 A32 R451 W112 W117 XA111 XR111

1x	17.04.02	Stalex (email)
4x	25.04.02	Stalex, Samuelsson
2x*	25.04.02	Stalex, Erection

TRANSMITTALS

PROJ: Berghella MHL-2 - Hafnarfjordur Iceland B/D: Stalex

BUILDING: AZM1 24.9% SPAN:17.000m EH:6.400m L:58.50m ALT:

LOADS: LL/WL/AddL : 100/160/20 (DaN/m2) CRANE: 60kN

NORMS: PRIM. IST SEC. DS MENOL - 11h33

108560

CS-4 A

DATE: 05/04/02
ENG.: W. Altmann
DRAF: K. Olsson

ASTRON

FRAME SECTION AXIS 7-9 RAMMAR-LÍNUR 7-9

REV. A.: Flange bracings
REV. B.
REV. C.

ASTRON BUILDINGS S.A. - P.O.Box152 - L-9202 DIEKIRCH-LUXEMBOURG - Tel:+352 80 29 11 - Fax:+352 80 34 66