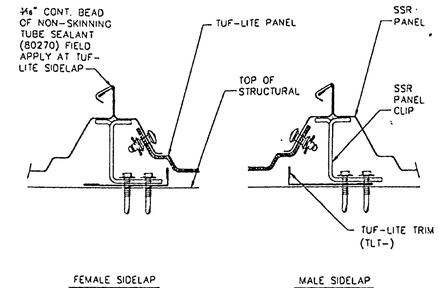

SEE RA01A1 RA01A4 FOR ADDITIONAL TUF-LITE DETAILS

SSR TUF-LITE SIDELAPS — RA01A2

NON-UL RATED

RA01A2V3 R 07/01/95

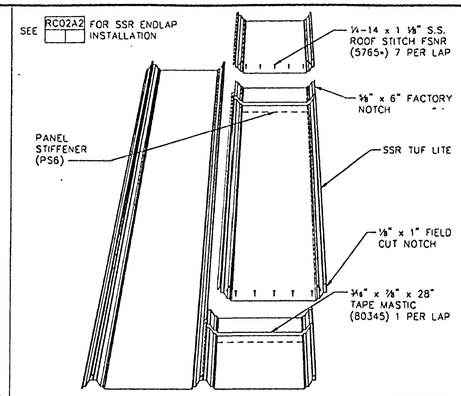

SSR TUF-LITE — RA01A4

PLAN VIEW

RA01A4V3 R 07/01/95

1. DETAILS SHOWN ON THIS PAGE SUPERCEDE SIMILAR DETAILS IN THE "SSR ERECTION GUIDE". REFER TO THE "SSR ERECTION GUIDE" AND "MASTER REFERENCE DRAWINGS" FOR OTHER DETAILS, INSTALLATION PROCEDURES, AND ACCESSORIES NOT DESCRIBED IN THESE DETAILS.
2. FIELD PAINT STAINLESS STEEL ROOF FASTENER HEADS USED AT WALL LOCATIONS WITH WALL TOUCH UP PAINT.
3. ALL SURFACES MUST BE FREE OF DIRT AND OIL AT MASTIC AND SEALANT LOCATIONS.

1. INTERIOR GUTTERS ARE TO BE INSTALLED LEVEL.
2. DOWNSPOUTS AND DOWNSPOUT NIPPLES ARE NOT PROVIDED BY VARCO PRUDEN. WELDING OF NIPPLES TO GALVANIZED GUTTER IS NOT RECOMMENDED.
3. SCRATCHES AND ABRASIONS TO THE GALVANIZED FINISH OF THE INTERIOR GUTTERS SHOULD BE TOUCHED UP WITH COLD GALVANIZING (N.B.V.P.).

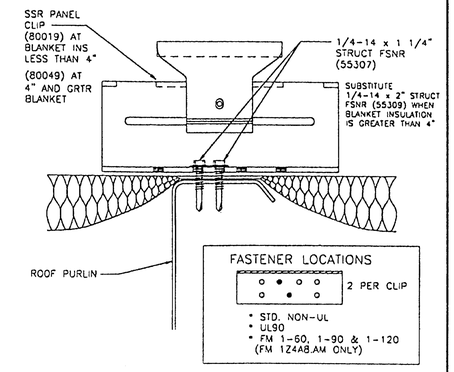

SSR PANEL CLIP ATTACHMENT — RC01A1

BLANKET INSULATION ON PURLINS

RC01A1V7 R 02/20/98

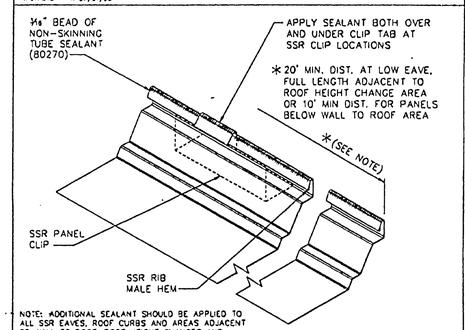

NOTE: ADDITIONAL SEALANT SHOULD BE APPLIED TO ALL SSR EAVES, ROOF CURBS AND AREAS ADJACENT TO WALL TO ROOF, ROOF HEIGHT CHANGES AND STEPPED ROOF EXPANSION JOINTS. IT IS RECOMMENDED THAT AREAS ADJACENT TO ROOF HEIGHT CHANGES COVER AT LEAST 3 SIDELAPS WITH THE SEALANT.

SSR PANEL SIDELAP — RC03A2

ADDITIONAL WEATHERSEAL AT ICE DAMMING COND.

RC03A2V1 03/01/90

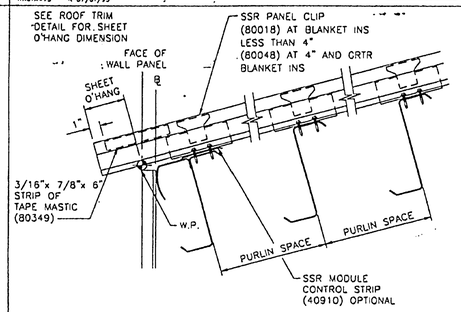

NOTE: FIXED CLIPS ARE MARKED WITH PAINTED TABS FOR EASY IDENTIFICATION.

SEE RC01** FOR SSR CLIP ATTACHMENT

SSR ROOF AT FIXED LOW EAVE — RC17A1

BLANKET INSULATION

RC17A1V7 R 07/15/88

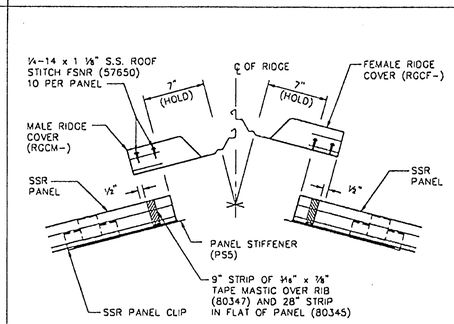

SEE RC34A4 FOR FSNR AND MASTIC PATTERN

SSR RIDGE COVER ATTACHMENT — RC34A1

RC34A1V2 R 03/01/90

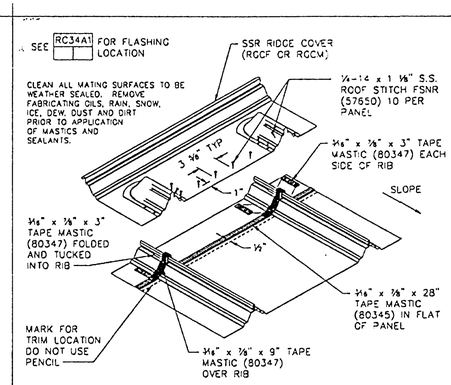

SSR RIDGE FLASHING — RC34A4

FASTENER AND MASTIC PATTERN

RC34A4V1 03/01/90

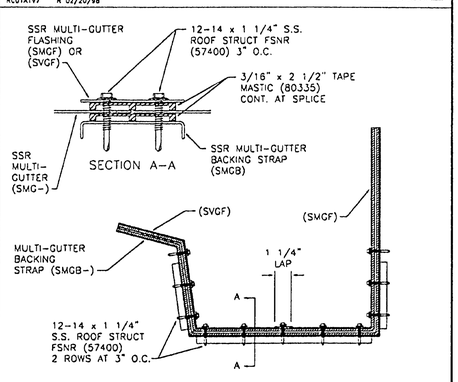

SSR OR SLR INTERIOR GUTTER — RC40A5

MULTI-GUTTER SPLICE

RC40A5V2 10/01/98

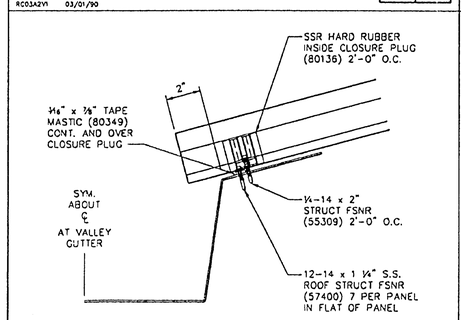

SSR INTERIOR GUTTER — RC42A1

PANEL ATTACHMENT; LESS THAN 25 PSF L.L.

RC42A1V3 R 07/01/92

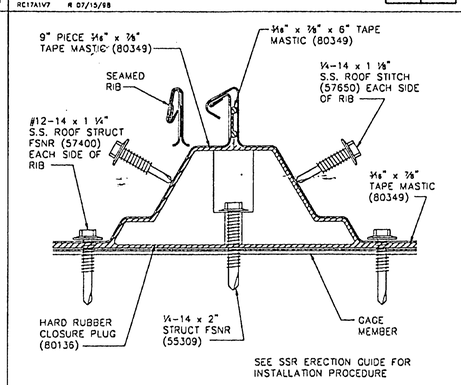

SSR HARD RUBBER CLOSURE PLUG — RC42A3

RC42A3V2 R 07/01/92

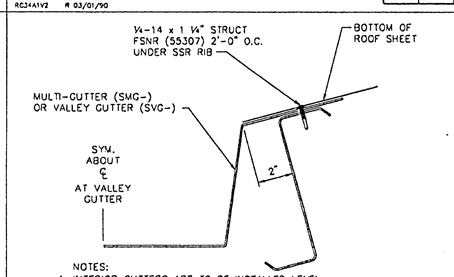

NOTES:
1. INTERIOR GUTTERS ARE TO BE INSTALLED LEVEL.
2. DOWNSPOUTS AND DOWNSPOUT NIPPLES ARE NOT PROVIDED BY VARCO-PRUDEN. WELDING OF NIPPLES TO GALVANIZED GUTTER IS NOT RECOMMENDED.
3. SCRATCHES AND ABRASIONS TO THE GALVANIZED FINISH OF THE INTERIOR GUTTERS SHOULD BE TOUCHED UP WITH COLD GALVANIZING (N.B.V.P.).
4. A HEAVY DUTY WEATHERING COATING SUCH AS BITUMASTIC (NBVP) WILL BE REQUIRED AFTER THE INT. GUTTER HAS BEEN INSTALLED AND ITS EXPOSED SURFACES PROPERLY PREPAIRED.

SSR INTERIOR GUTTER — RC43A1

BLANKET INSULATION ON PURLINS

RC43A1V3 R 03/15/91

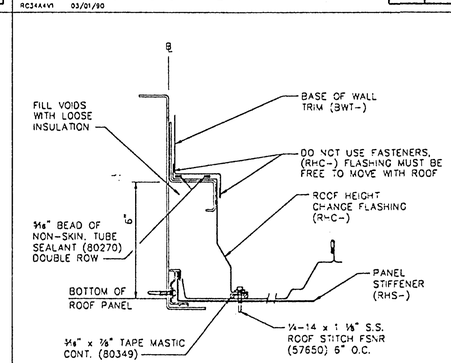

ROOF HEIGHT CHANGE FLASHING — RC52A1

SSR ROOF (METAL FLASHING)

RC52A1V1 03/01/90

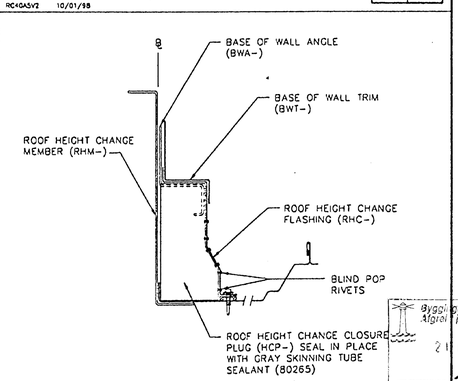

ROOF HEIGHT CHANGE END CAP — RC52A6

SSR ROOF AT EAVE (METAL FLASHING)

RC52A6V1 03/01/90

VERKFRÆÐISTOFA NORÐURLANDS ehf.

Byggingarfulltrúi Hafnarfjarðar
Afgreiðsla
21 MARS 2000
Sigurður Ingi Friðleifsson

Verkfræðistofa Norðurlands ehf.
Hofsbót 4 600 Akureyri. kt. 560175-0869
Eirikur Jónsson byggingaverkfr.
kt. 051045-4679

THIS DRAWING, INCLUDING THE INFORMATION HEREON, REMAINS THE PROPERTY OF VP BUILDINGS, INC.

IT IS PROVIDED FOR ERECTING THE BUILDING DESCRIBED IN THE APPLICABLE PURCHASE ORDER AND SHALL NOT BE MODIFIED, REPRODUCED, OR USED FOR ANY OTHER PURPOSE WITHOUT PRIOR WRITTEN APPROVAL OF VP BUILDINGS.
THE GENERAL CONTRACTOR AND/OR ERECTOR IS SOLELY RESPONSIBLE FOR ACCURATE, GOOD QUALITY, WORKMANSHIP IN ERECTING THIS BUILDING IN CONFORMANCE WITH THIS DRAWING, DETAILS REFERENCED IN THIS DRAWING, ALL APPLICABLE VP ERECTION DETAILS AND ALL INDUSTRY STANDARDS PERTAINING TO PROPER ERECTION, INCLUDING THE CORRECT USE OF TEMPORARY BRACING.

ERECTION DETAILS

REV	DATE	BY	DESC		
				BUILDER	Varco-Pruden Exports
				CUSTOMER	Sindri
				LOCATION	Iceland.
				PROJ. NAME	Sindri Workshop
SCALE				BLDG. NAME	Workshop 1

VP BUILDINGS
VARCO-PRUDEN

JOB NO. NE9970314-02-01
DATE 08/16/99
DRAWN BY DHG
CHKD. BY
PG 22