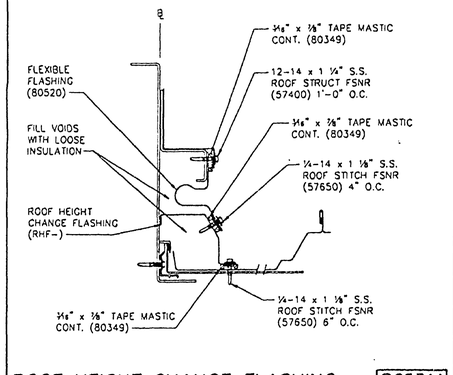

ROOF HEIGHT CHANGE FLASHING — RC53A1

SSR ROOF (FLEXIBLE FLASHING)

RC53A1V1 03/01/90

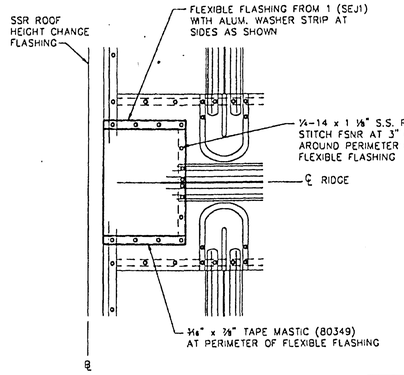

ROOF HEIGHT CHANGE FLASHING — RC53A4

SSR ROOF AT PEAK (FLEXIBLE OR METAL FLASHING)

RC53A4V1 03/01/90

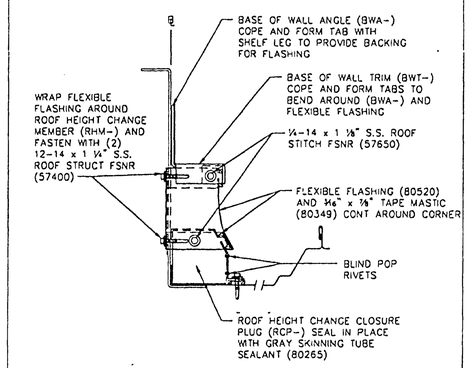

ROOF HT CHG END CAP — RC53A6

SSR ROOF AT EAVE (FLEXIBLE FLASHING)

RC53A6V1 03/01/90

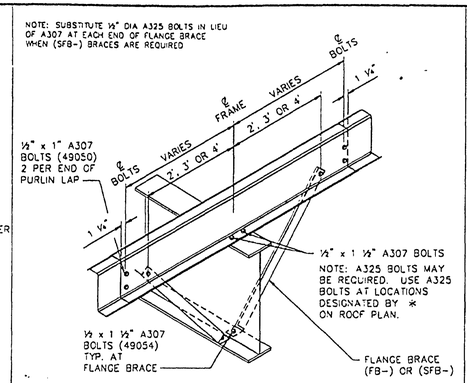

PURLIN CONN. AT INTERIOR FRAME — RS01A2

6 1/2" OR 8 1/2" CONTINUOUS PURLINS W/O CLIP

RS01A2V1 06/22/94

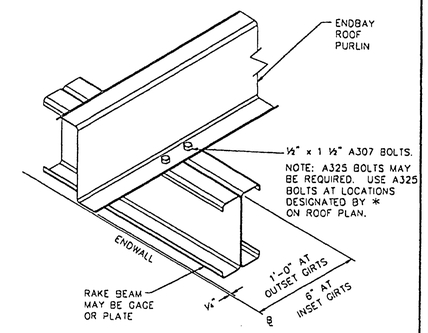

PURLIN CONN. TO END FRAME — RS02A1

6 1/2" OR 8 1/2" CONT. OR SIMPLE W/O CLIP

RS02A1V3 R 06/22/94

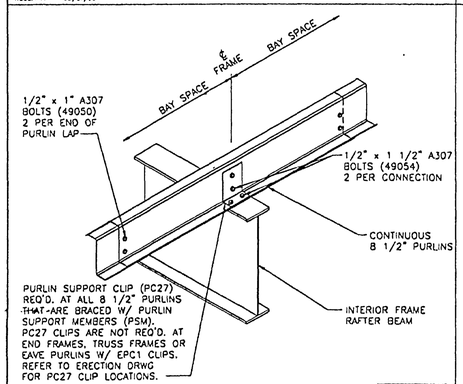

8 1/2" PURLIN SUPPORT CLIP — RS03A1

AT 8 1/2" PURLINS SUPPORTED WITH PSM'S

RS03A1V4 R 03/04/98

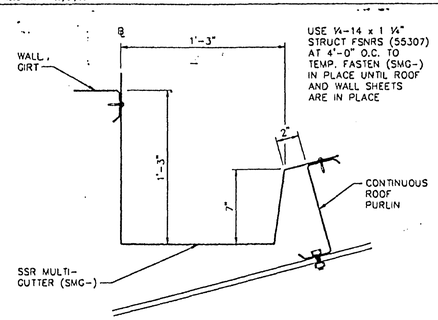

MULTI-GUTTER FRAMING — RS43A1

SSR ROOF; BLANKET INSULATION

RS43A1V1 12/31/91

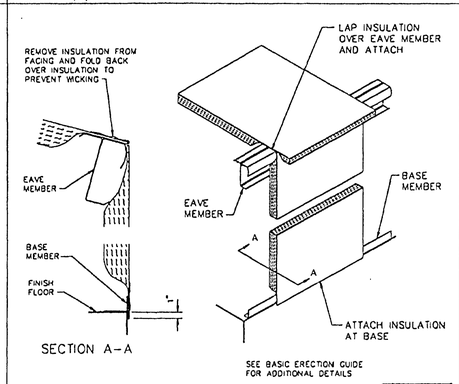

INSULATION DETAIL — WC32A1

EAVE AND BASE

WC32A1V1 03/01/90

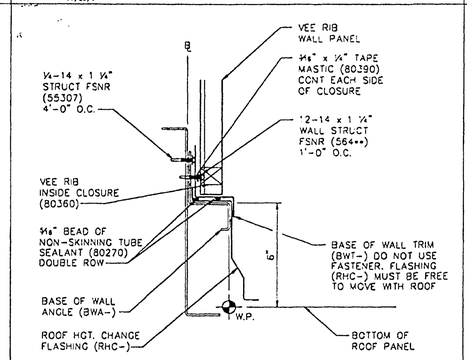

BASE OF WALL AT RF HT CHANGE — WC52B1

VEE RIB WALL (LESS THAN 25 PSF L.L.) METAL FLASHING

WC52B1V1 03/01/90

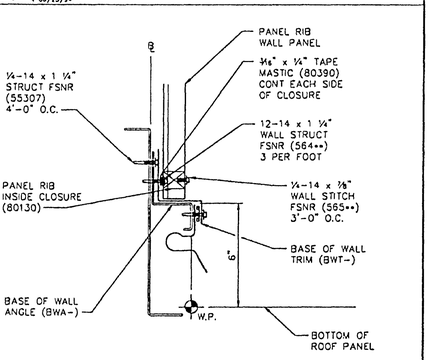

BASE OF WALL AT RF HT CHANGE — WC53A1

PANEL RIB WALL (LESS THAN 25 PSF L.L.) FLEXIBLE FLASHING

WC53A1V2 R 01/15/94

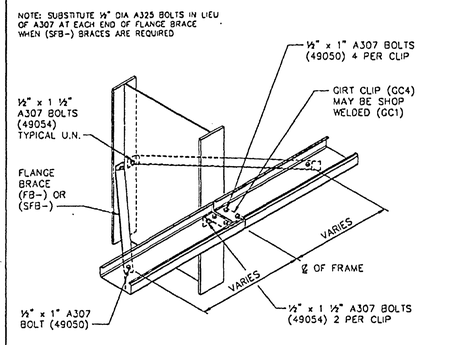

GIRT CONN. AT SIDEWALL COLUMN — WS01A1

6 1/2" & 8 1/2" OUTSET CEE GIRTS

WS01A1V3 R 10/31/91

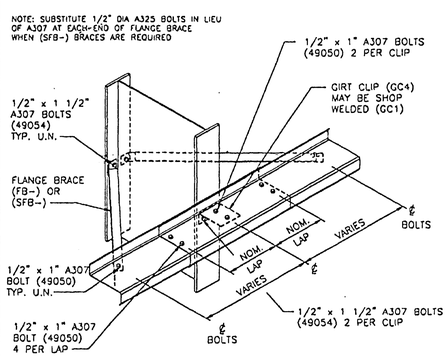

GIRT CONN. AT SIDEWALL COLUMN — WS01A3

6 1/2" & 8 1/2" OUTSET CONTINUOUS ZEE GIRTS

WS01A3V3 R 03/04/98

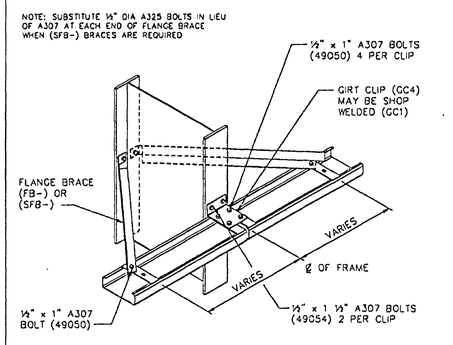

GIRT CONN. AT SIDEWALL COLUMN — WS01A4

6 1/2" & 8 1/2" OUTSET PLATE GLASS HEADER

WS01A4V2 R 10/31/91

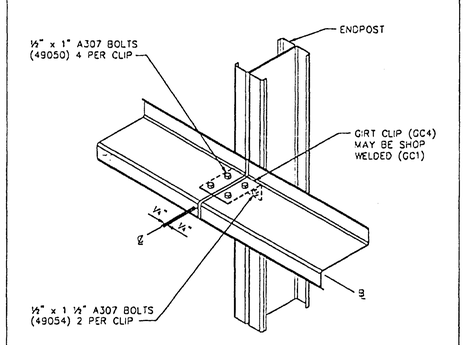

GIRT CONN. AT ENDWALL ENDPOST — WS02B2

6 1/2" & 8 1/2" OUTSET SIMPLE ZEE GIRTS

WS02B2V4 R 03/01/93

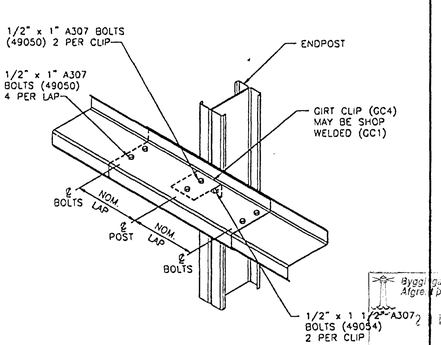

GIRT CONN. AT ENDWALL ENDPOST — WS02B3

6 1/2" & 8 1/2" OUTSET CONTINUOUS ZEE GIRTS

WS02B3V4 R 03/04/98

Byggingafulltrúi Hafnarfjarðar
Afgreiddur
MARS 2000
Sigurður Halldórsson

VERKFRÆÐISTOFA NORÐURLANDS ehf.

Verkfræðistofa Norðurlands ehf.
Hofsbót 4 600 Akureyri. kt. 560175-0869
Einkur Jónsson byggingaverkfr.
kt. 051045-4679

THIS DRAWING, INCLUDING THE INFORMATION HEREON, REMAINS THE PROPERTY OF VP BUILDINGS, INC.

IT IS PROVIDED FOR ERECTING THE BUILDING DESCRIBED IN THE APPLICABLE PURCHASE ORDER AND SHALL NOT BE MODIFIED, REPRODUCED, OR USED FOR ANY OTHER PURPOSE WITHOUT PRIOR WRITTEN APPROVAL OF VP BUILDINGS. THE GENERAL CONTRACTOR AND/OR ERECTOR IS SOLELY RESPONSIBLE FOR ACCURATE, GOOD QUALITY, WORKMANSHIP IN ERECTING THIS BUILDING IN CONFORMANCE WITH THIS DRAWING, DETAILS REFERENCED IN THIS DRAWING, ALL APPLICABLE VP ERECTION DETAILS AND ALL INDUSTRY STANDARDS PERTAINING TO PROPER ERECTION, INCLUDING THE CORRECT USE OF TEMPORARY BRACING.

ERECTION DETAILS

REV	DATE	BY	DESC		
				BUILDER	Varco-Pruden Exports
				CUSTOMER	Sindri
				LOCATION	Iceland.
				PROJ. NAME	Sindri Workshop
SCALE				BLDG. NAME	Workshop 1

VP BUILDINGS
VARCO-PRUDEN

JOB NO.	NE9970314-02-01
DATE	08/16/99
DRAWN BY	DHG
CHKD. BY	
PC	73