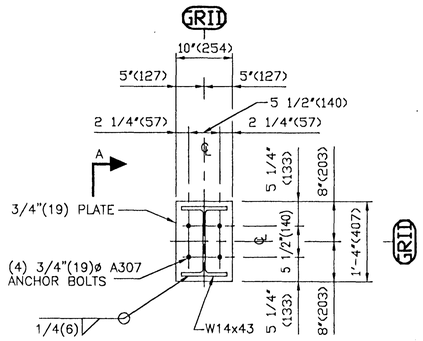

DETAIL A1
(SEE PLAN FOR COLUMN ORIENTATION)

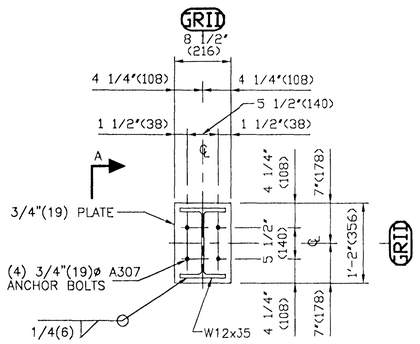

DETAIL A2
(SEE PLAN FOR COLUMN ORIENTATION)

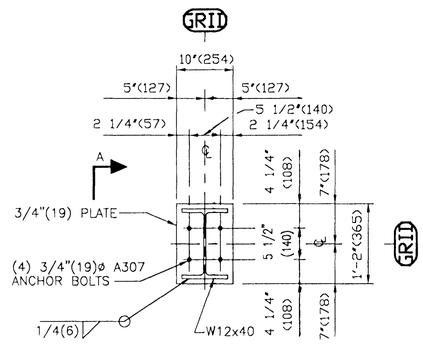

DETAIL A3
(SEE PLAN FOR COLUMN ORIENTATION)

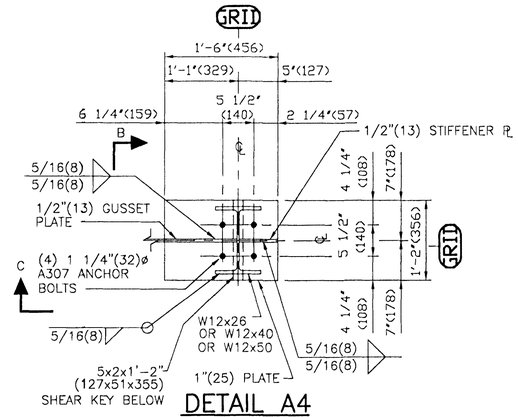

DETAIL A4
(SEE PLAN FOR COLUMN ORIENTATION)

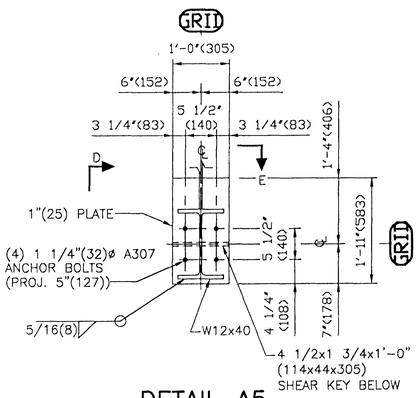

DETAIL A5
(SEE PLAN FOR COLUMN ORIENTATION)

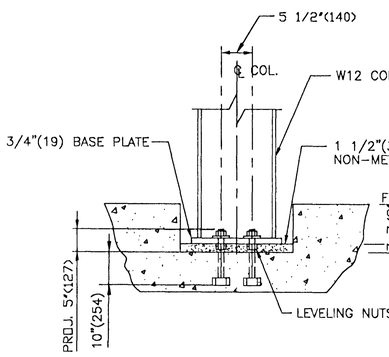

SECTION A

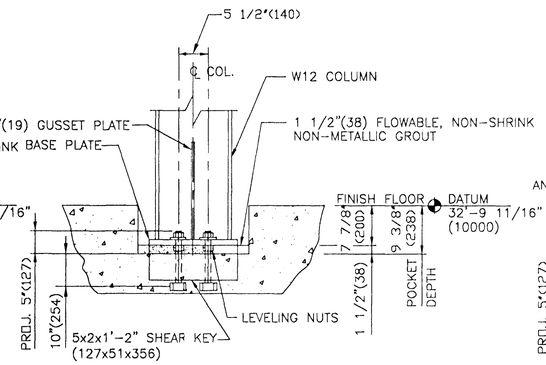

SECTION B

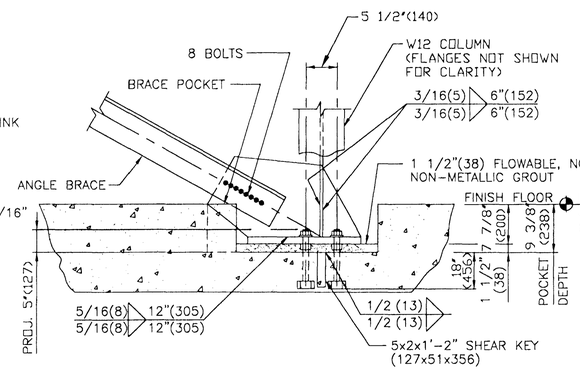

SECTION C

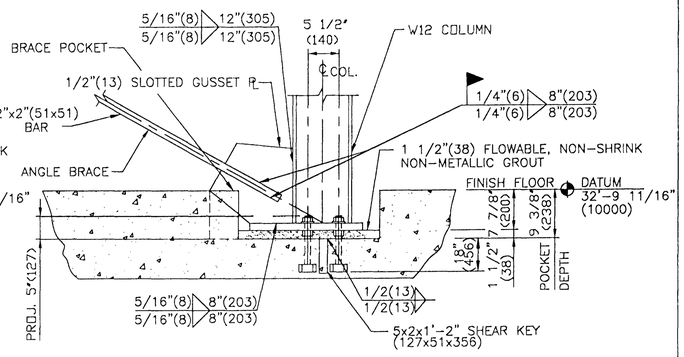

SECTION D

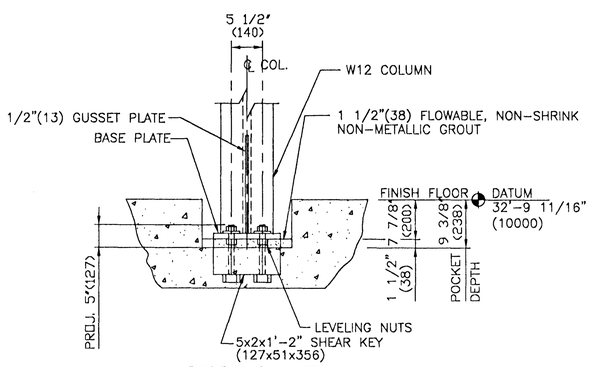

SECTION E

STATE OF MISSOURI
MICHAEL W. JAMES
NUMBER E-22996
REGISTERED PROFESSIONAL ENGINEER

Byggingafulltrúi Hafnarfjarðar
Afgreitt þann
20 MARS 2000
Sigurjartur Halldórsson

Verkfræðistofa Norðurlands ehf.
Hofsbót 4 600 Akureyri. kt. 560175-0869
Eiríkur Jónsson byggingaverkfr.
kt. 051045-4679
VERKFRÆÐISTOFA NORÐURLANDS ehf.

NOTES:
1. SEE SHEET S0.1 FOR GENERAL STRUCTURAL NOTES.
2. DIMENSIONS IN PARENTHESIS ARE THE EQUIVALENT IN mm.

Constructive Engineering Design Inc.
Consulting Structural Engineers
222 W. Gregory Blvd., Suite 340
Kansas City, Missouri 64114-1127

Building Code:	86MBMA
Live Ld(W/O Trib Red)	205 kgsm
Coll. Ld (gravity):	24.4 kgsm
Coll. Ld (uplift):	0.0 kgsm
Wind Speed:	193 kmph
Wind Exp. Cat.:	C
Ground Snow:	178.6 kgsm
Roof Snow:	100.0 kgsm
Snow Exp. Cat.:	3
Seismic Zone:	3
Building Use Cat.:	4
Auxiliary Loads	NONE

This Drawing, including the information hereon, remains the property of VP Buildings.

It is provided for Erecting the Building described in the applicable Purchase Order and shall not be modified, reproduced or used for any other purpose without prior Written Approval of VP Buildings.

The General Contractor and/or Erector is solely responsible for accurate, good quality workmanship in erecting this building in conformance with this Drawing, Details referenced in this Drawing, all applicable VP Buildings Erection Details and all Industry Standards pertaining to proper erection, including the correct use of Temporary bracing

ANCHOR BOLT & BASE PLATE DETAILS

REV	DATE	BY	DESC.

SCALE: NTS

BUILDER	International Client
CUSTOMER	Sindri
LOCATION	Reykjavik, Iceland
PROJECT	Sindri Workshop
BUILDING	Office

QUOTE #

VP BUILDINGS
VARCO-PRUDEN

JOB #	P9924127
DATE	07/20/99
TIME	xx:xx
DRAW/CHECK	CW/ME
PAGE	S1.2