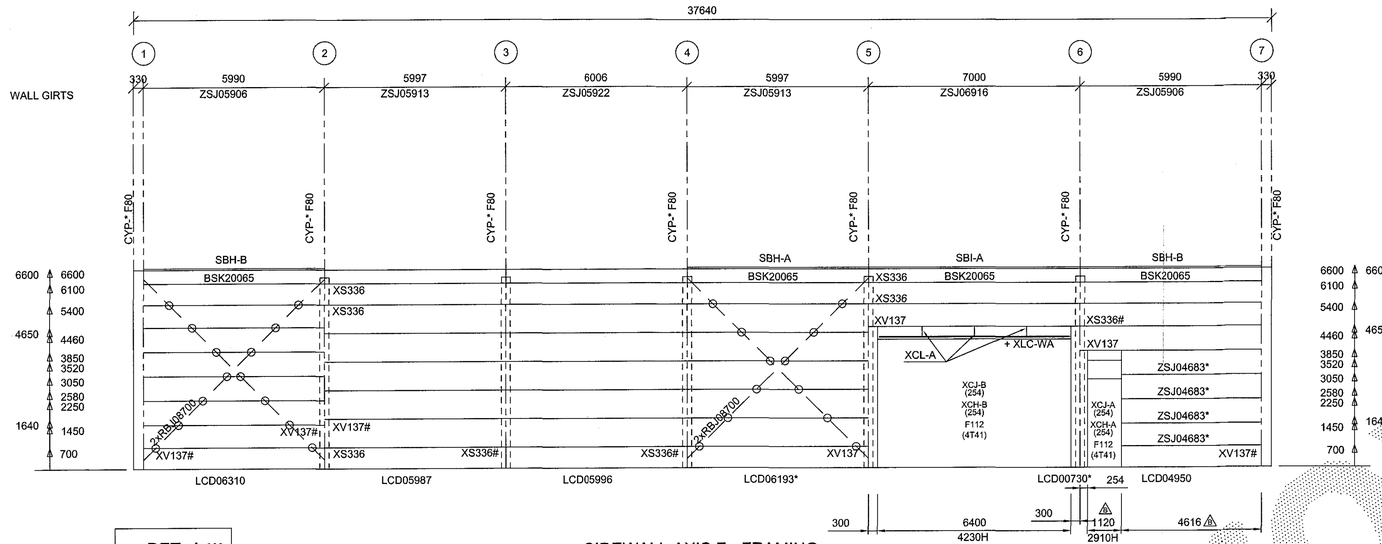

○ DET- A !!!

SIDEWALL AXIS F - FRAMING

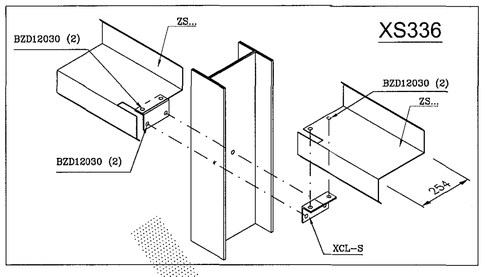

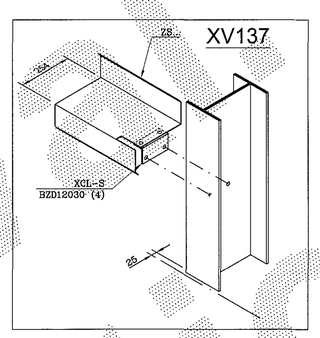

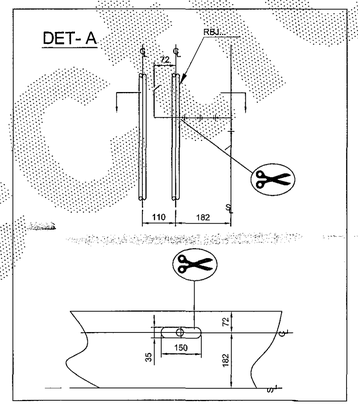

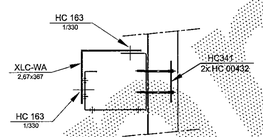

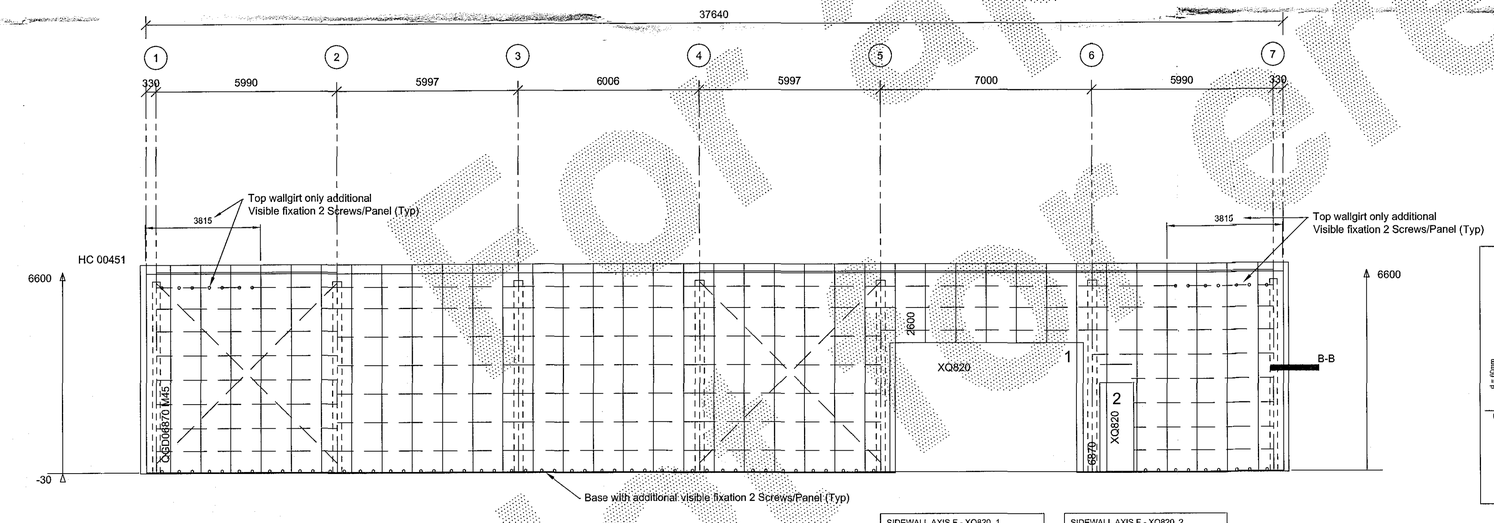

SIDEWALL AXIS F - SHEETING

SIDEWALL AXIS F - XQ820. 1	
XFL-VC M45	1.500
XFL-VB M45	2.000
FL00151 M45	3.000

SIDEWALL AXIS F - XQ820. 2	
XFL-VC M45	0.500
XFL-VB M45	1.000
FL00151 M45	1.250

Panels in B5 BOM

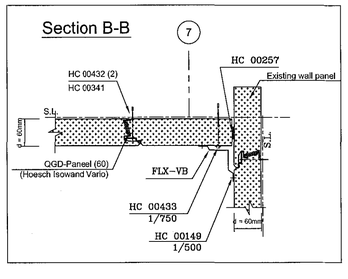

Unless noted different :
All BSK- bolts must be installed with
'TORQUE CONTROL' method, with the
following torque values :

TORQUE VALUES (Nm)	
	10.9 bolts
M20	450
M22	650
M24	800
M27	1250
M30	1650

All other must be installed 'SNUG TIGHT'

ATTENTION

The complete building must be erected according to the erection documents and manuals as provided by Lindab Buildings and all applicable local codes and standards. Moreover, we draw your attention to the points below as they are most critical for the building stability :

1. Correct amount, type, position and installation of flange bracings (LF- ; XLF-) in roof and walls.
2. Double nuts on the wind bracing rods and wind bracing being fastened.
3. Structural bolts in grade 10.9 must be assembled with structural nuts and washers in the same 10.9 grade only. Place structural bolts 10.9 grade as indicated on drawings.
4. Correct fastening of all the structural bolts using the method as specified by Lindab Buildings
5. Correct number of all purlins and girts spacers (CL 00025, CL 00021...).
6. Correct number and location of double purlins.
7. Correct positioning of the sag rods (RSG..) and cleats (CL 00140).

Samþykkt bann
17 NOV 2015
Byggingafulltrúinn í Hafnarfirði
F.h. Sigurður Steinar Jónsson

STD PROFILES DESCRIPTION LIST	NSTD PROFILES DESCRIPTION LIST
LCD : NOT DEFINED RBJ : TIE ROD DIAM 24 SBH : STRUT PIPE 168 * 6.35 SBI : STRUT PIPE 168 * 6.35 ZSJ : ZEE SIMPLE SPAN 254*2.30	XCH-A : DOOR HEADER 254 * 2.95 XCH-B : DOOR HEADER 254 * 2.95 XCJ-A : DOOR JAMB 254 * 2.30 XCJ-B : DOOR JAMB 254 * 3.20

TECHNICAL NOTES

General
---
1. Drawings must be read in conjunction with Lindab Buildings Technical M
2. Building components must be erected in accordance with erection information supplied by Lindab Buildings and all applicable local codes and standards.
3. All measurements are in millimetres
4. * = Field adapted
5. # = Typical detail - Unless noted different
6. Purlin spacings are rounded to mm and cannot be added

Foundations and Anchor Bolts
---
1. Foundations must be designed by a qualified foundation engineer (more details on AB-layout)
2. Applicable columns reactions see chart "Foundation Reactions"

Primary and Secondary Structural Framing
---
1. Flange bracing installation as per technical manual (TM) standard detail W1 .. chapter
2. Unless noted different:
   1) Purlin diaphragms - at peak (see TM W316, W326, W327)
      - Double purlins (see TM W311, W321)
   2) Wind bracing details, see TM chapter W2..
   3) Roof stabilization if necessary:
      - Purlins spacers (HS... see TM details W37. and W 38.)
      - Sag rods (RSG-) see TM W ... and cross-section.
      - Tie straps (HC 00250) see TM W7.. chapter.

Panels and Accessories
---
1. Field locate roof openings and accessories
2. Field cut and adapt girts and panels shown in overlap with an accessory element
3. Compensation of panel tolerance currently during installation

HÚS OG RÁÐGJÖF ehf.
ARKITEKTAR - OG VERKFRÆÐISTOFA
Kt. 510393-2329 • VSK 37600
Dugguvogur 17, 104 Reykjavík
Sími 562-2420 • Fax 562-2430
26.10.2015
Helgi G. Sammúelsson

This design is the property of Lindab Buildings, a member of the Lindab Group.
Copying and manufacturing components according to these drawings or calculations is illegal.

070962-2279
Þorsteinn Þorkelsson
220848-2189.

DET: 2T12 4T41 4T42 S913 S914 S915 W211

1x	08.10.2015	HEGAS (e-mail)
1x	02.10.2015	HEGAS (e-mail)

TRANSMITTALS

PROJ: Selhella 9 - 220 Hafnarfjordur - Iceland B/D: HEGAS
BUILDING: AL -3.8% SPAN:30.390m EH:6.600m L:37.64m ALT: 14m
LOADS: LL / WL / AddL : 1.26 / 1.80 / 0.45 (kN/m2) Seismic : ag =0.2g
Importance class of building: EXC2
NORMS: PRIM. EC3 SEC. EC3

170805
SW-2 B

ASTRON

SIDEWALL AXIS F Hliðarveggur Ás F
(SCALE:1/100)

DATE: 29/09/15
ENG.: W.Altmann
DRAF: Karal Zoltan

REV. A.: Decrease the length of the panel and changed the opening size, added the cover flash. 07.10.2015. Z.K.
REV. B.: Changed the width of the door 15.10.2015. Z.K.
REV. C.

LINDAB BUILDINGS S.A. - P.O.Box152 - L-9202 DIEKIRCH-LUXEMBOURG - Tel:+352 80 29 11 - Fax:+352 80 34 66