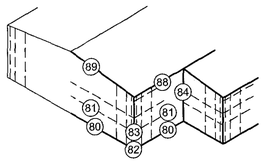

	Hoesch Vario(60)
80	SV H60
81	SV H61
82	SV H62
83	SV H63
84	SV H64
85	
86	
87	
88	SV H68
89	
90	

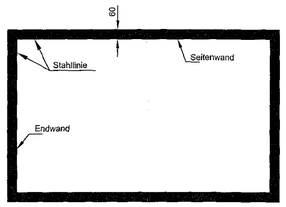

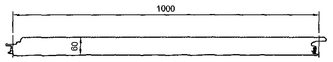

QGD... VARIO ML60

HC 00432 indirekte Verschraubung

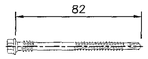

HC 00341 Lastverteilerplatte

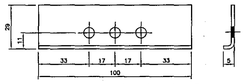

XXP-G Lastverteilerplatte
(Z43-142)

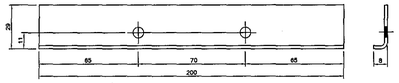

HC 00433 direkte Verschraubung

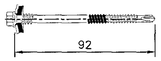

Detail B

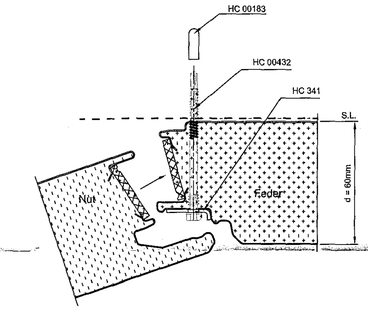

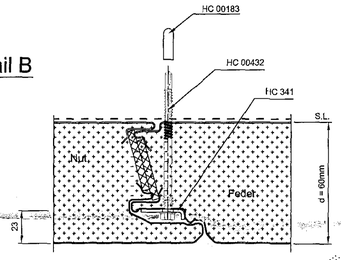

SV H63

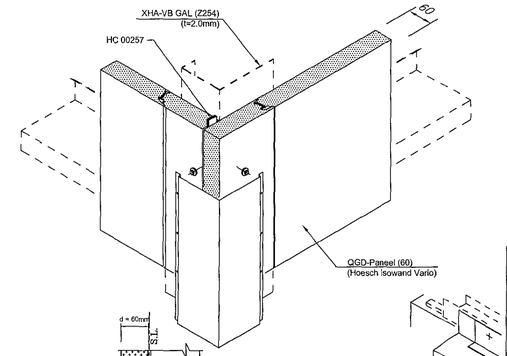

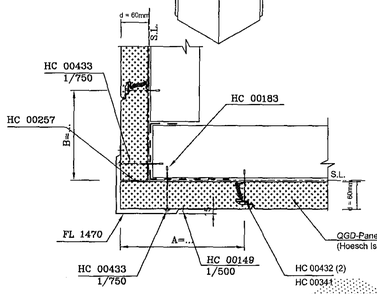

A + B = max.950mm (Bauseits aus einem Paneel schneiden)

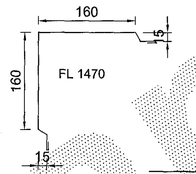

VARIANTE B

HC 00183 FÜR HÖHE ≤ 3000

SV H62

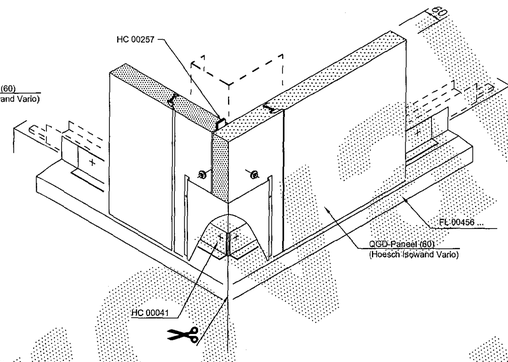

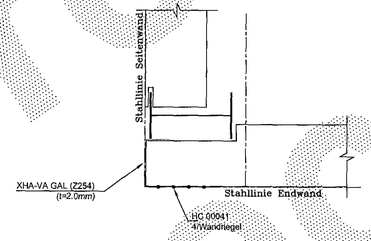

SV H68

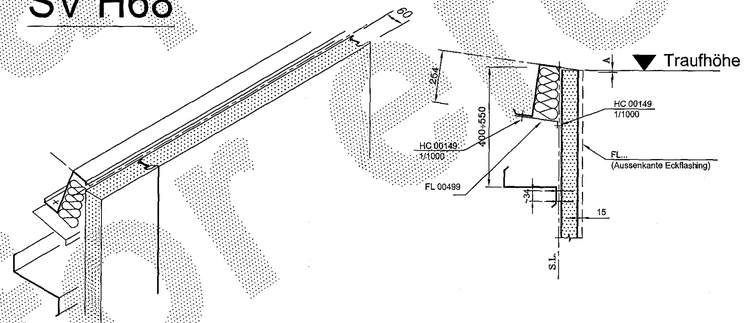

XSV H61

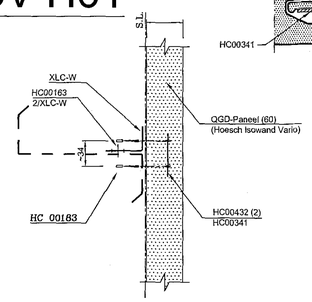

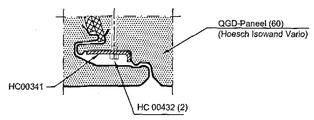

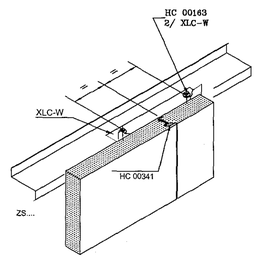

HC 00183 FÜR HÖHE ≤ 2500

SV H60

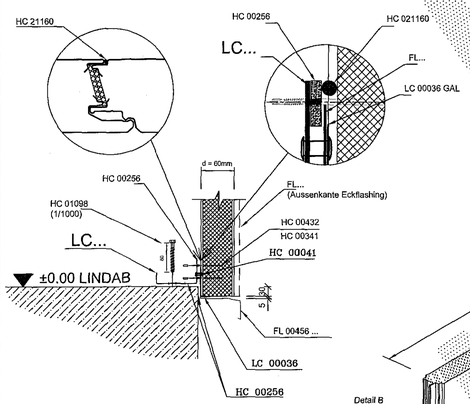

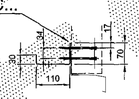

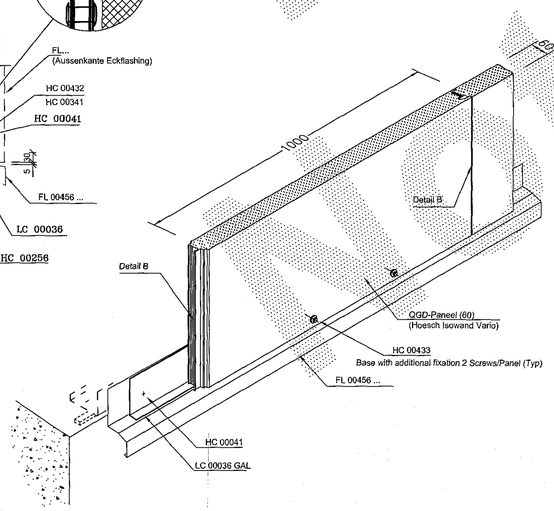

SV H64

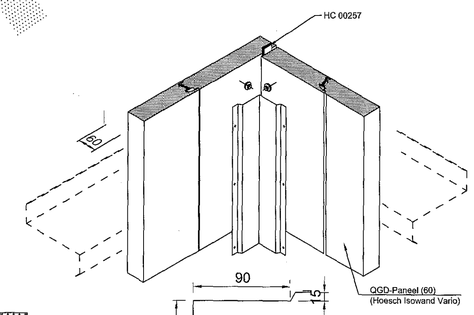

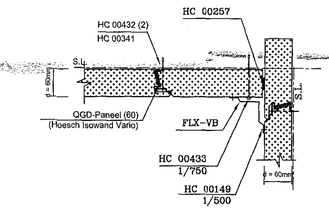

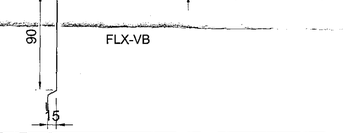

A + B = max.950mm (Bauseits aus einem Paneel schneiden)

Bei der Montage der Wandpaneele bitte auch die mitgelieferte Montageanweisung beachten!

Samþykkt þann
17 NOV 2015
Byggingafulltrúinn í Hafnarfirði
F.h. Sigurður Steinar Jónsson

TECHNICAL NOTES

General

1. Drawings must be read in conjunction with Lindab Buildings Technical M
2. Building components must be erected in accordance with erection information supplied by Lindab Buildings and all applicable local codes and standards.
3. All measurements are in millimetres
4. * = Field adapted
5. # = Typical detail - Unless noted different
6. Purlin spacings are rounded to mm and cannot be added

Panels and Accessories

1. Field locate roof openings and accessories
2. Field cut and adapt girts and panels shown in overlap with an accessory element
3. Compensation of panel tolerance currently during installation

090962-2299

This design is the property of Lindab Buildings, a member of the Lindab Group.
Copying and manufacturing components according to these drawings or calculations is illegal.

DET:

1x	08.10.2015	HEGAS (e-mail)
1x	02.10.2015	HEGAS (e-mail)

TRANSMITTALS

PROJ.: Selhella 9 - 220 Hafnarfjordur - Iceland B/D: HEGAS

BUILDING: AL -3.6% SPAN:30.390m EH:6.600m L-37.64m ALT: 14m

LOADS: LL / WL / AddL : 1.26 / 1.80 / 0.45 (kN/m2) Seismic : ag =0.2g

Importance class of building: EXC2

NORMS: PRIM. EC3 SEC. EC3

170805

DET-1

DATE: 29/09/15
ENG.: W.Allmann
DRAF: Kanal Zoltan

ASTRON

DETAILPLAN HOESCH ISOWAND VARIO (D=60mm)

REV. A.
REV. B.
REV. C.

LINDAB BUILDINGS S.A. - P.O.Box152 - L-9202 DIEKIRCH-LUXEMBOURG - Tel:+352 80 29 11 - Fax:+352 80 34 66