Format A1 (841x594 mm) is 20 mm outside of this frame

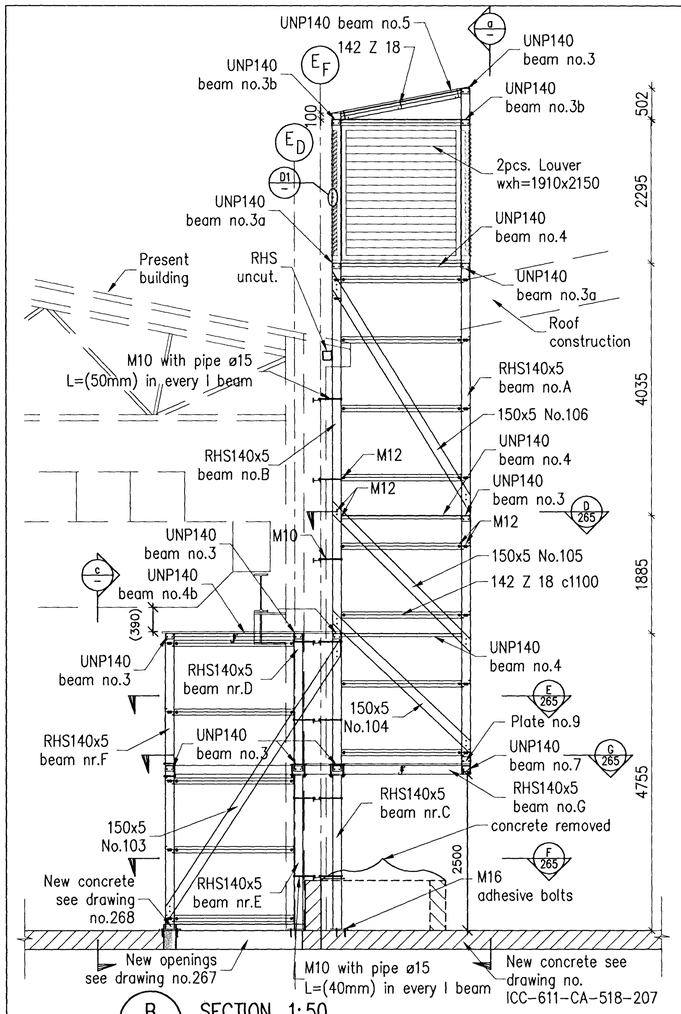

B / 261 SECTION, 1:50

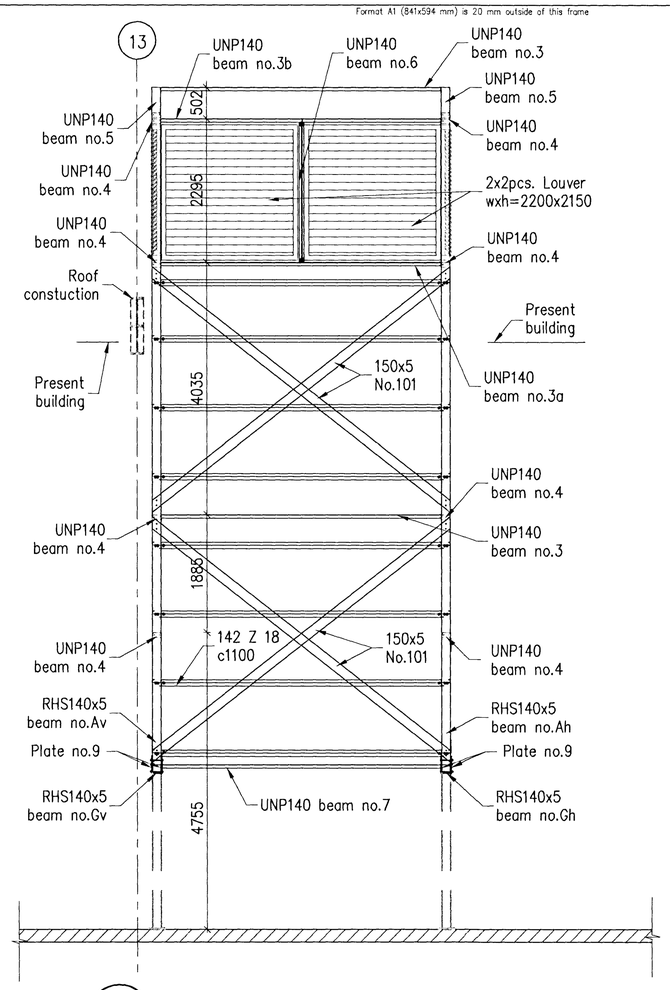

a / – SECTION, 1:50

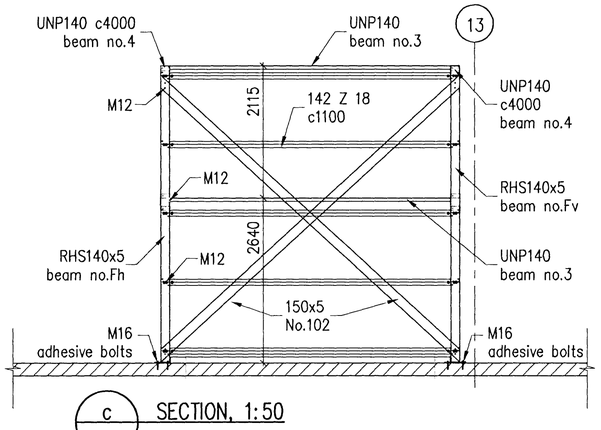

c / – SECTION, 1:50

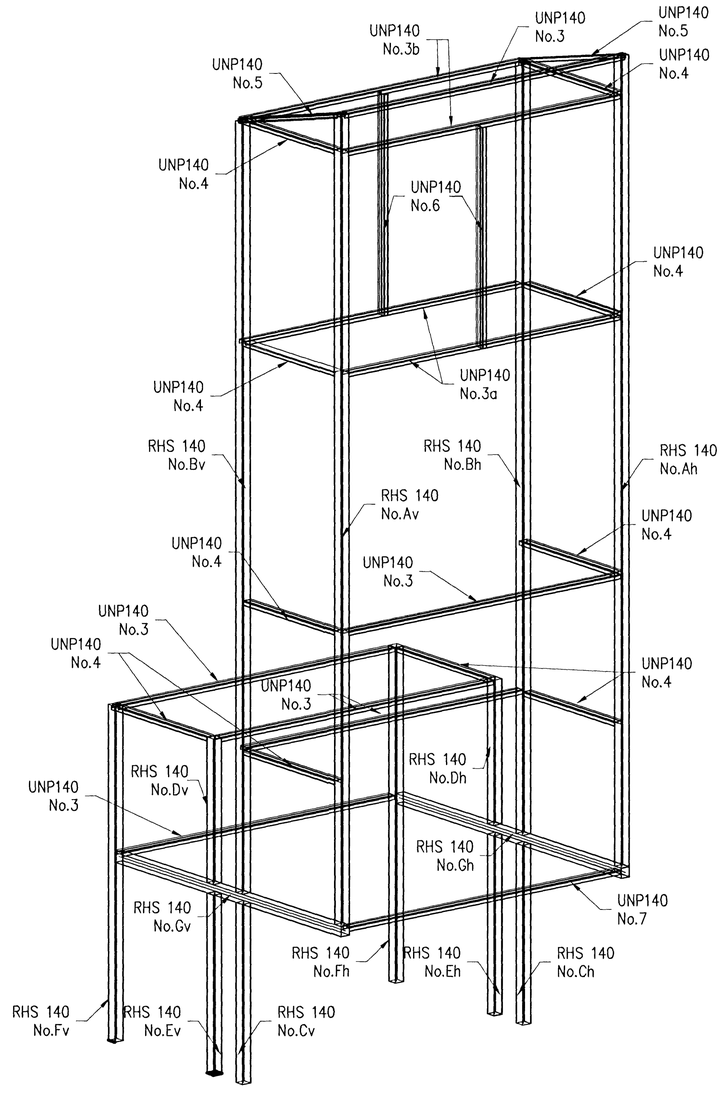

3D-OVERVIEW, RHS AND UNP PROFIL

Samþykkt þann
20 JAN 2011
Byggingafulltrúinn í Hafnarfirði
F.h. Hrólfur S. Gunnlaugsson

Nicht indiziert
NI

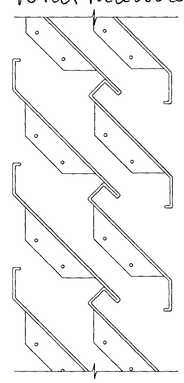

Intake louver double-type

D1 / – DETAIL, 1:2

1:50 0 1000 5000mm

1:5 0 100 500mm

Skýringar:
Explanations:

Details, see drawing no. 266 and 267.
All bolts are 8.8 and hot dip galvanized.
Shims should be used between aluminium and steel, e.g. rubber or Siga Nail sealing tape.

C:\IDP\03 ICC\600 Casting\600 Drawings\Civil\ICC-611-ZA-518-264.DWG

HOME International

HRV ENGINEERING

Breyt. Rev.	Breyting Revision	Dags. Date	Samþ. Approved	Nótk. heimil Released
4	Issued for construction	10.11.24	Kgp	

Tilv.teikningar nr. ISAL / Ref.drawing no. of ISAL
Samsetn.teikningar nr. ISAL / Assembly drawing no. of ISAL

This drawing is the property of the Rio Tinto Alcan Iceland Ltd. and handed out for personal use only. It may neither be copied nor made available to others without permission of the Rio Tinto Alcan Iceland Ltd. The receiver is liable for any misuse.

Fjöldi stykkja / Number of pieces: IV | III | II | I

Hlutur Object	Atriði Item	Efni Material	ea.:stk Weight	Total:í heild (kg) þyngd	Athugasemdir Remarks

ICC
CASTHOUSE EXTENSION BUILDINGS, STEP 1
BUILDING 1
VENTILATION, INTAKE, SECTIONS

Stærð / Format: A1 — Mkv. / Scale: 1:50,2
Kostn.nr.-bún.nr. / CCna.-Eq.no.
AKS no.
Verktaki / Supplier: HRV
Teikn.nr. verktaka / Drw.no. of suppl.: ICC-611-ZA-518-264 — Breyt./Rev.: C
Teiknað / Drawn: AgS 2010.05.28 — Yfirfarið / Checked: NI — Samþykkt / Approved: NI

RioTintoAlcan — ISAL Straumsvík, Alcan Iceland Ltd, IS-222 Hafnarfjörður

Teikn.nr. of ISAL / Teikn.nr. ISAL — Breyt./Rev.
Teiknað / Drawn — Yfirfarið og skráð / Checked and filed — Nótkun heimilað / Released