Format A1 (841x594 mm) is 20 mm outside of this frame

Samþykkt þann
19 JAN 2011
Byggingarfulltrúinn í Hafnarfirði
F.h. Hrólfur S. Gunnlaugsson

Nick Indridason

FOUNDATION F1c
6 pcs

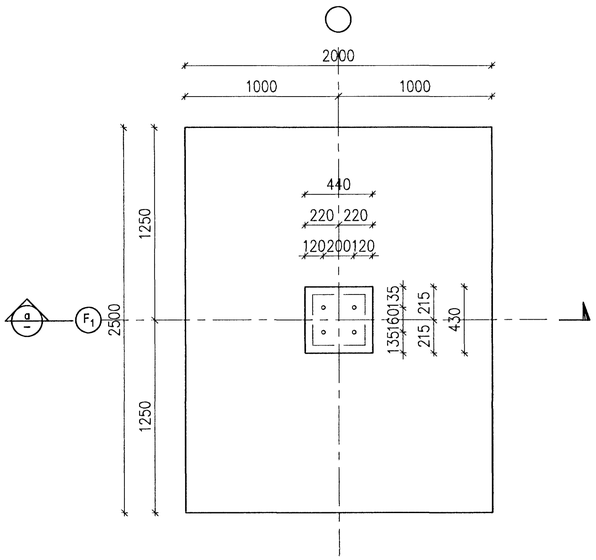

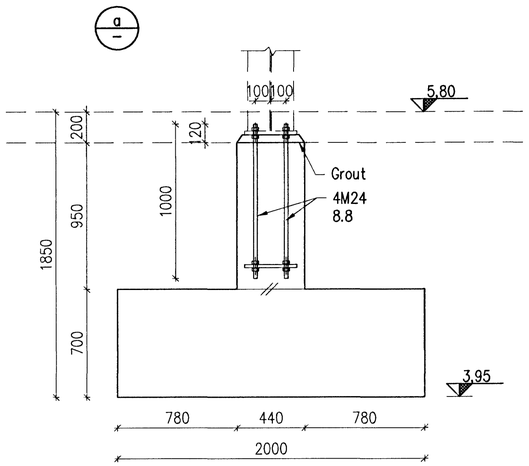

FOUNDATION F2c
2 pcs

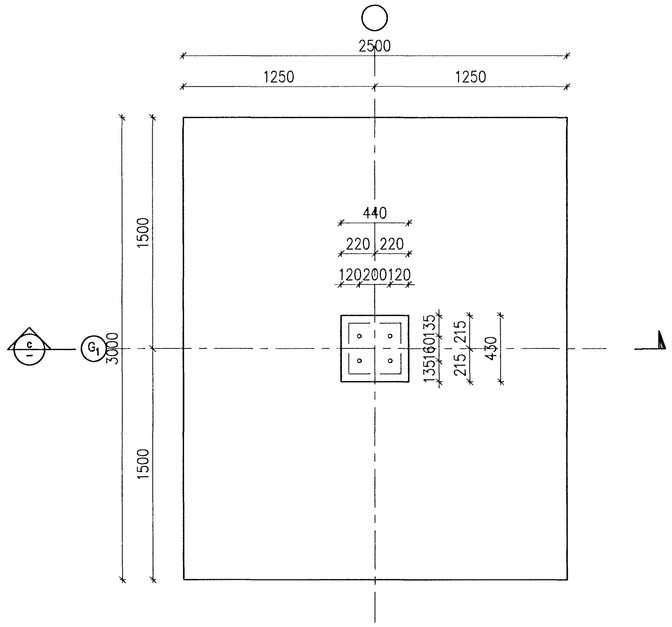

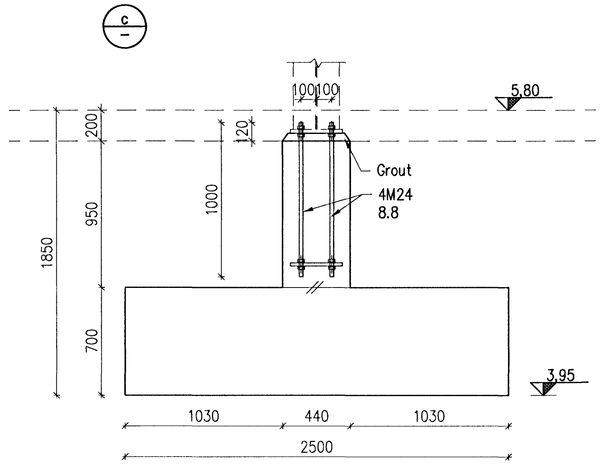

CONCRETE: C30/37:XF3-38

1:20
1000 0 1000mm

Skýringar:
Explanations:

C:\IDP\03 ICC\600 Casting\600 Drawings\Civil\ICC-611-CA-518-205.dwg

HOME International
HRV ENGINEERING

Breyt. Rev.	Breyting Revision	Dags. Date	Samþ. Approved	Notk. heimil Released
2	Issued for construction	10.11.24	Kgs	

Tilv.teikningar nr. ISAL
Ref.drawing no. of ISAL

Samsetn.teikningar nr. ISAL
Assembly drawing no. of ISAL

This drawing is the property of the Rio Tinto Alcan Iceland Ltd. and handed out for personal use only. It may neither be copied nor made available to others without permission of the Rio Tinto Alcan Iceland Ltd. The receiver is liable for any misuse.

Fjöldi stykkja Number of pieces: IV III II I

Hlutur Object	Atriði Item	Efni Material	ea.:stk Weight	total:f heild (kg) þyngd	Athugasemdir Remarks

ICC
CASTHOUSE EXTENSION BUILDINGS
BUILDING 2, FORM WORK
FOUNDATIONS F1c & F2c

Stærð Format: A1 | Mkv. Scale: 1:20
Kostn.nr.-bún.nr. / CCno.-Eq.no.
AKS no.
Verktaki / Supplier: HRV
Teikn.nr. verktaka / Drw.no. of suppl.: ICC-611-CA-518-205 | Breyt./Rev.: C
Teiknað Drawn: HS/AFV 2010.11.01 | Yfirfarið Checked: NI | Samþykkt Approved: NI

Rio Tinto Alcan
ISAL Straumsvík
Alcan Iceland Ltd
IS-222 Hafnarfjörður

Drw.no. of ISAL / Teikn.nr. ISAL | Breyt./Rev.
Teiknað Drawn | Yfirfarið og skráð Checked and filed | Notkun heimilið Released