Samþykkt þann
02 OCT 2012
Byggingafulltrúinn í Hafnarfirði
F.h. Sigurður Steinar Jónsson

Nick Indriðason
Kt. 181144-3949 NI

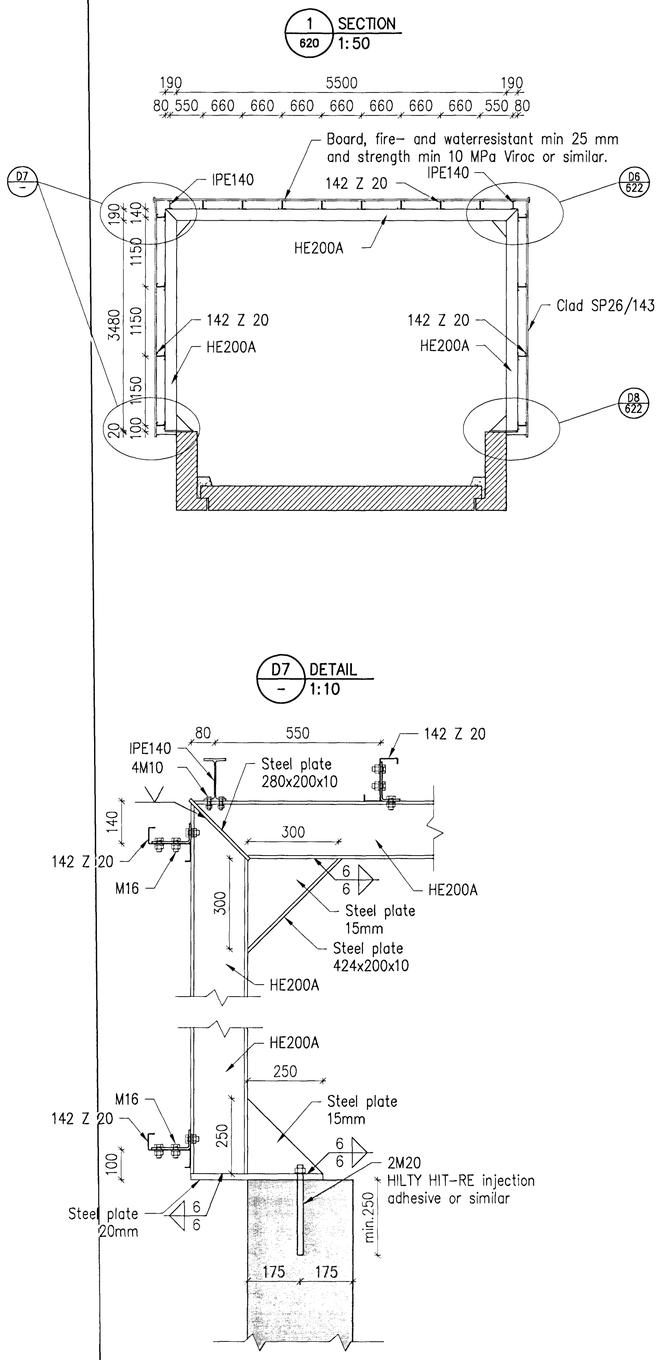

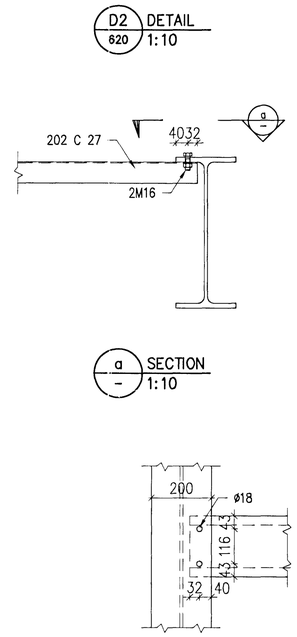

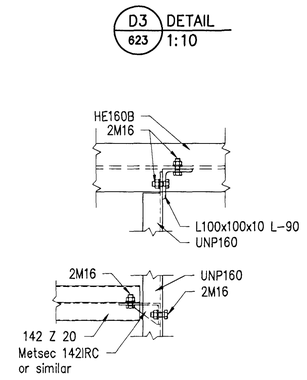

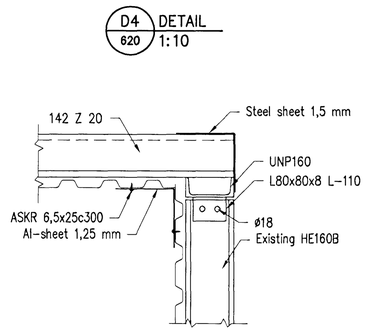

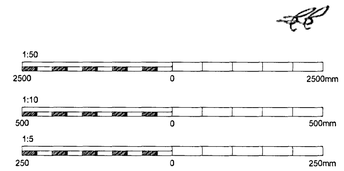

Skýringar: GENERAL NOTES see drawing ICC-611-CA-541-600
Legend:

Útg nr / Rev no	Lýsing / Description	Dagsetning / Date	Han/Tkn / Des/Drw	Yfirf / Chkd	Notk heim / Suppl Rel	Notk heim / ISAL Rel
7	Record Drawing	2012.07.23	HS	NI	FG	NAS

This drawing is the property of Rio Tinto Alcan Iceland Ltd. and handed out for personal use only. It may neither be copied nor made available to others without permission of Rio Tinto Alcan Iceland Ltd. The receiver is liable for any misuse.

Stærð: Format: A1 Mkv.: Scale: 1:50,10,5
Dimensions without tolerances according to ISO 2768-1 medium.

HRV & HATCH JOINT VENTURE ISAL PRODUCTION UPGRADE

Dagsetning / Date: 2011.04.07
Hannað / Designed: HS
Teikn / Drawn: LDB
Verktaki / Supplier: HRV
Teikn.nr.verktaka / Supplier drw.no.: ICC-611-ZA-541-621
Samþykkt / Approved: NI
Yfirf / Chkd: NI
Hluti af: / Part of:

IPU-CASTHOUSE EXTENSION BUILDINGS, RAMPS
RAMP 1
SECTIONS AND DETAILS

Teg.teikningar / Dwg. type: STEEL STRUCTURE

RioTintoAlcan
ISAL Alcan Iceland Ltd Straumsvík IS-222 Hafnarfjordur Iceland

Flokkur nr.: Blað nr.: Næsta bl.nr.:
Kostn.nr.-Cono. / Bún.nr.-Eq.no: 5010 16957
AKS: UF002
Teikn.nr. ISAL /Drw.no. of ISAL: 253547
Breyt./Rev.: A

ISAL Yfirfarið og skráð, dags / ISAL Checked, date
ISAL Samþykkt, dags / ISAL Approval, date

C:\IDP\03 ICC\600 Casting\600 Drawings\Civil\ICC-611-ZA-541-621.dwg