DP5 / 256 DRAWING PIT 1:20

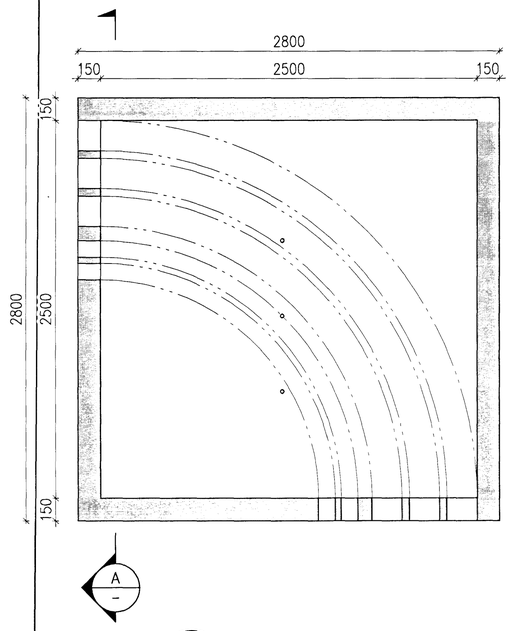

A / – SECTION 1:20

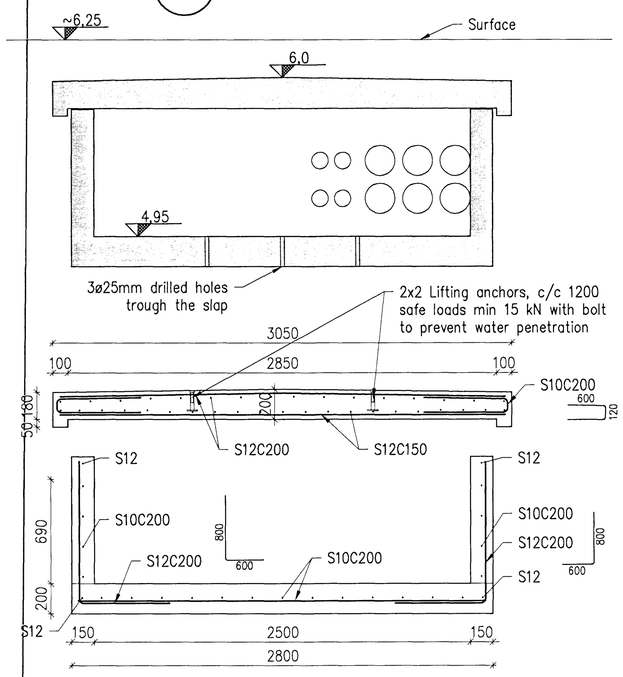

DP6 / 256 DRAWING PIT 1:20

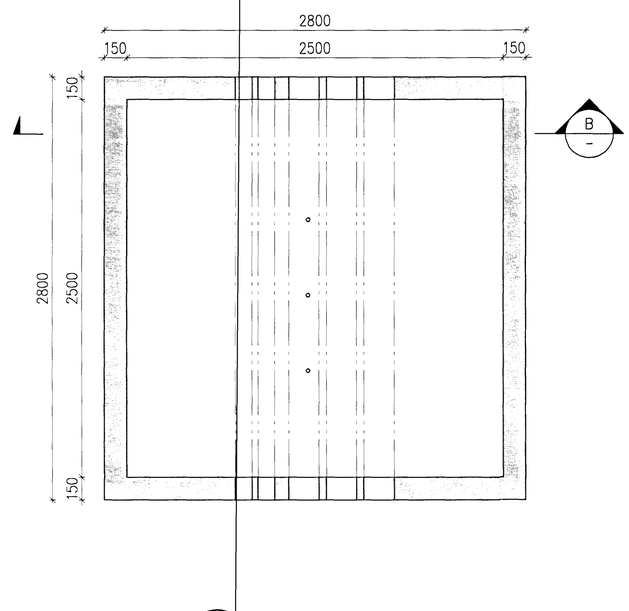

B / – SECTION 1:20

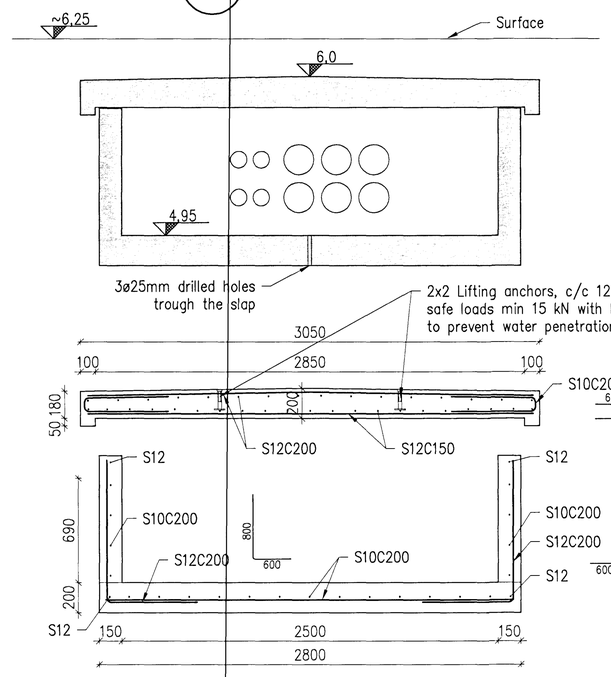

Samþykkt þann
01 OCT 2012
Byggingafulltrúinn í Hafnarfirði
F.h. Sigurður Steinar Jónsson

Niki Indriðason
Kt. 181144-3949 NI

1:20 0 1000 2000mm

Skýringar:
Legend

13	Record drawing	2012.09.12	GMG	NI	BG	RES	
Útg.nr Rev no	Lýsing Description	Dagsetning Date	Han/Tkn Des/Drw	Yfirf Chkd	Notk.heim Suppl Ref	Notk.heim ISAL Ref	

This drawing is the property of Rio Tinto Alcan Iceland Ltd. and handed out for personal use only. It may neither be copied nor made available to others without permission of Rio Tinto Alcan Iceland Ltd. The receiver is liable for any misuse.

Stærð: Format: A1 Mkv.: Scale: 1:20
Dimensions without tolerances according to ISO 2768-1 medium.

HRV & HATCH JOINT VENTURE
ISAL PRODUCTION UPGRADE

Dagsetning / Date: 2010.08.23
Hannað / Designed: GMG
Teikn / Drawn: GMG
Verktaki / Supplier: HRV
Teikn.nr.verktaka / Supplier drw.no: IDP-410-CA-015-262
Samþykkt / Approved: NI
Yfirf / Chkd: NI
Hluti of. / Part of:

IPU 410 – POWER AREA
EMBEDDED CONDUITS AND MANHOLES
DRAWING PIT DP5 AND DP6, DETAILS

Teg.teikningar / Dwg. type: DRAWING PITS

Flokkur nr.: | Blað nr.: | Næsta bl.nr.:
Kostn.nr.-Ccno. / Bún.nr.-Eq.no: 4011 01188
AKS: UB01

RioTintoAlcan
ISAL Alcan Iceland Ltd Straumsvík IS-222 Hafnarfjörður Iceland

Teikn.nr. ISAL /Drw.no. of ISAL: 251269
Breyt./Rev.: A

ISAL Yfirfarið og skráð, dags / ISAL Checked, date
ISAL Samþykkt, dags / ISAL Approved, date

C:\IDP\01\IDP\400 – Reduction\410 Substation\Drawings\Civil\IDP-410-CA-015-262.dwg