SECTION 1:20
CRANE RUNWAY IN AXIS (B)

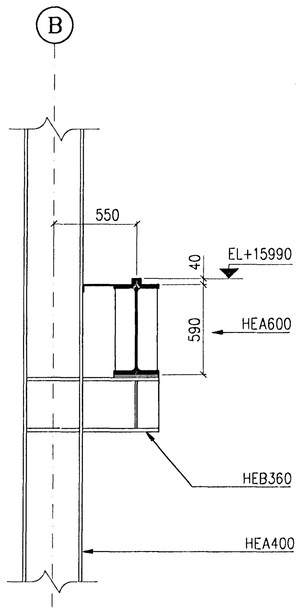

SECTION 1:20
CRANE RUNWAYS IN AXES (C_B) AND (C_D)

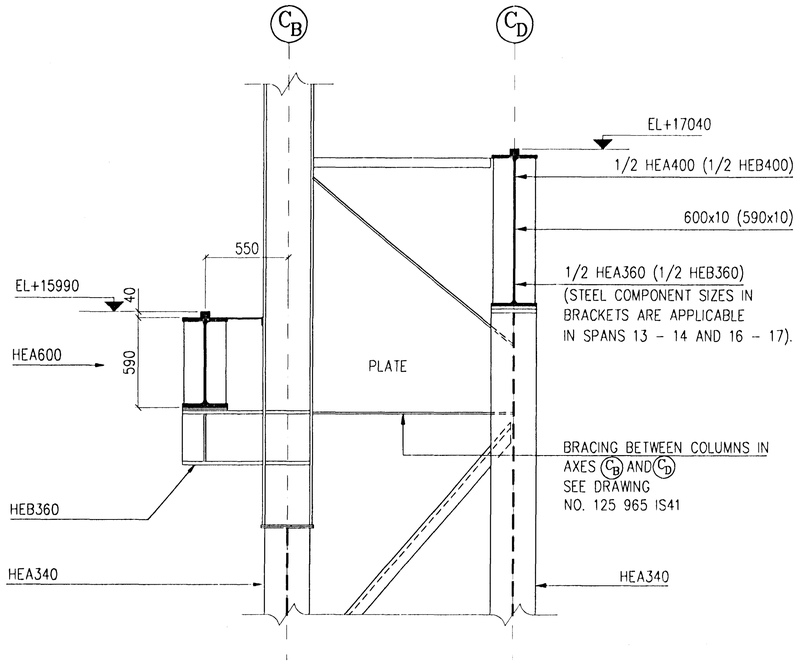

SECTION 1:20
CRANE RUNWAYS IN AXES (D_C) AND (D_E)

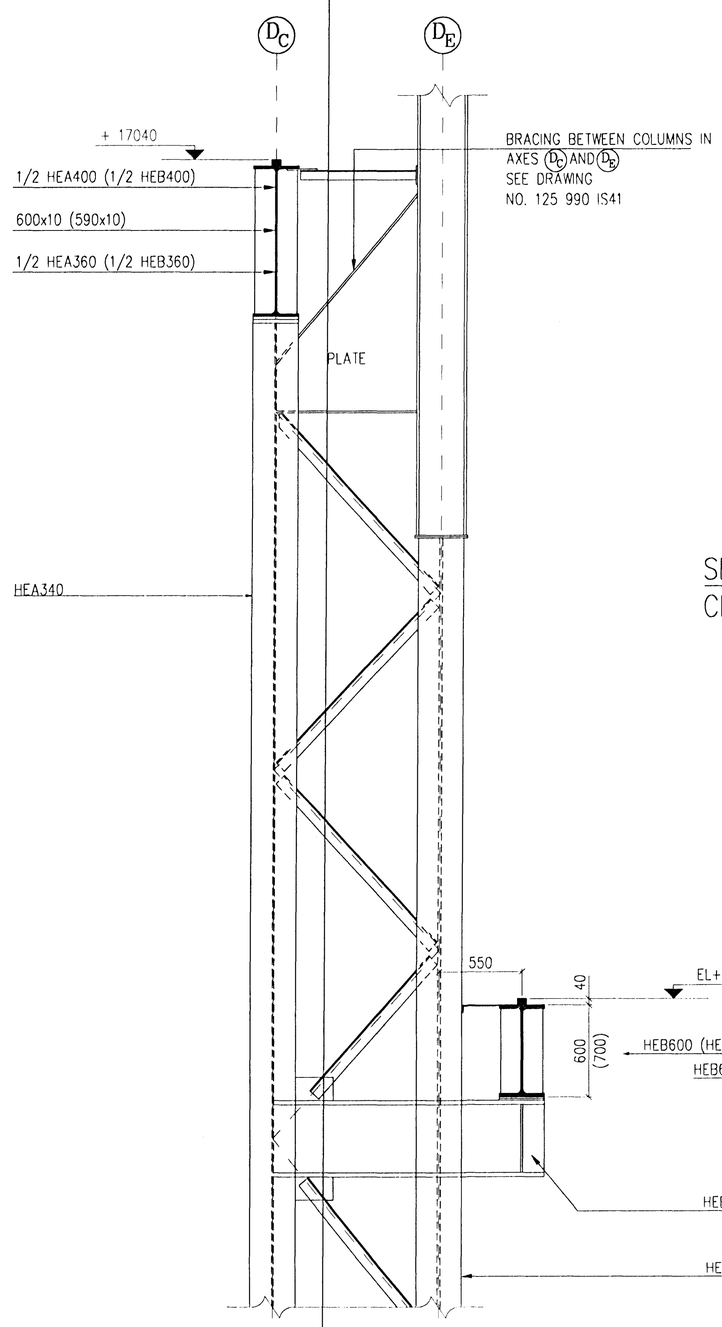

SECTION 1:20
CRANE RUNWAY IN AXIS (E_D)

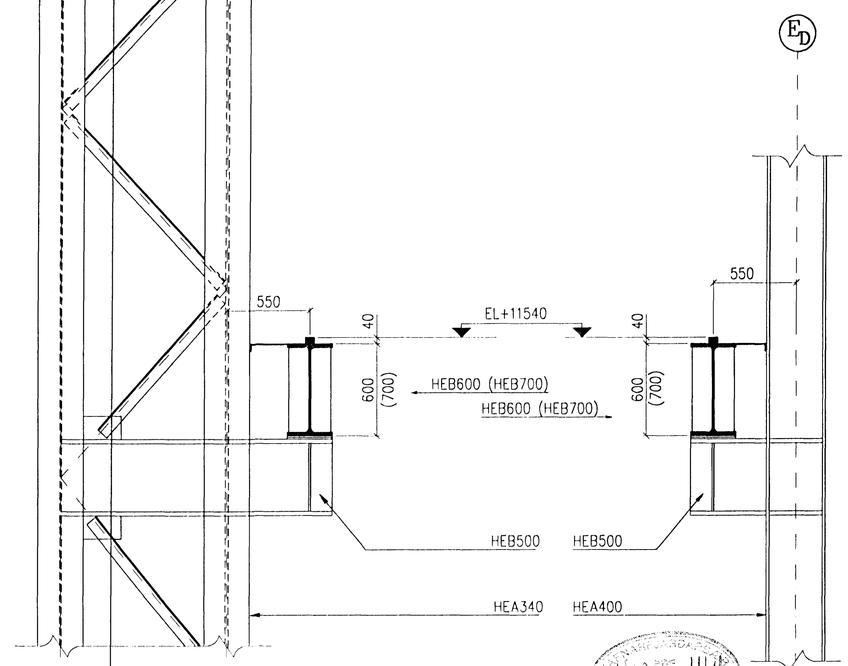

REV. NO.	DATE	REVISION	BY	APP.	REV. NO.	DATE	REVISION	BY	APP.
1 A	14.12.1997	AS BUILD	UH						
0	20.5.1996	ISSUED FOR TENDER							

NOTES

REFERENCE DRAWING

DRAWING NUMBER

This drawing is our property and given for personal use only. It may not be copied or made available to others without our permission. The receiver is responsible for any misuse.

ICELANDIC ALUMINIUM COMPANY LTD.

DRAWN	3.5.1996	HHH
APPROVED	3.5.1996	UH
PROCESS		
PROJECT		
SCALE 1:20		FORMAT A1

ALUSUISSE ALESA — ALESA ALUSUISSE ENGINEERING LTD. ZURICH SWITZERLAND

VERKFRAEDISTOFAN ONN SF.
TAEKNITHJONUSTAN SF.

CASTHOUSE EXTENSION
STRUCTURAL
CRANE RUNWAYS
SECTIONS, BRACKETS

79000-34233 — REVISION 1

193.435 — A