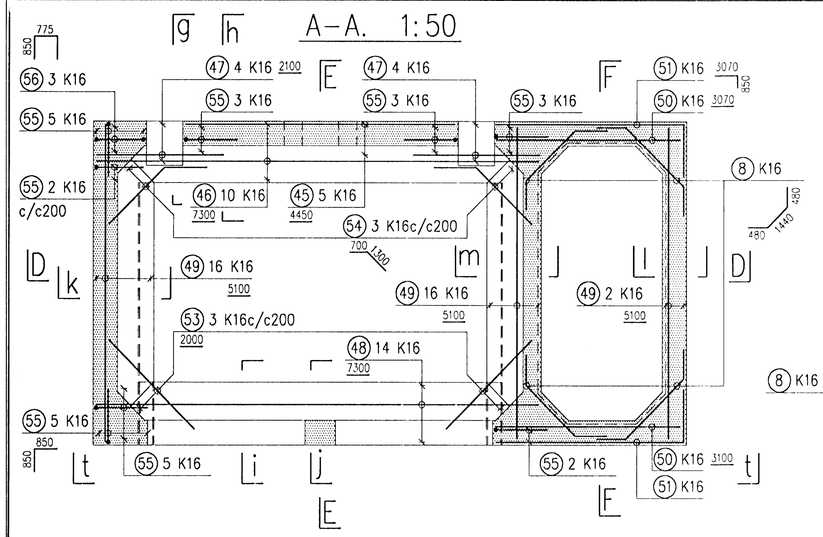

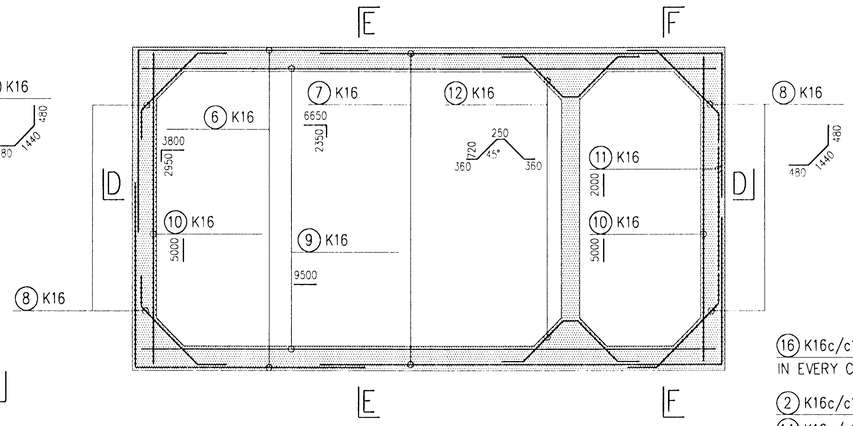

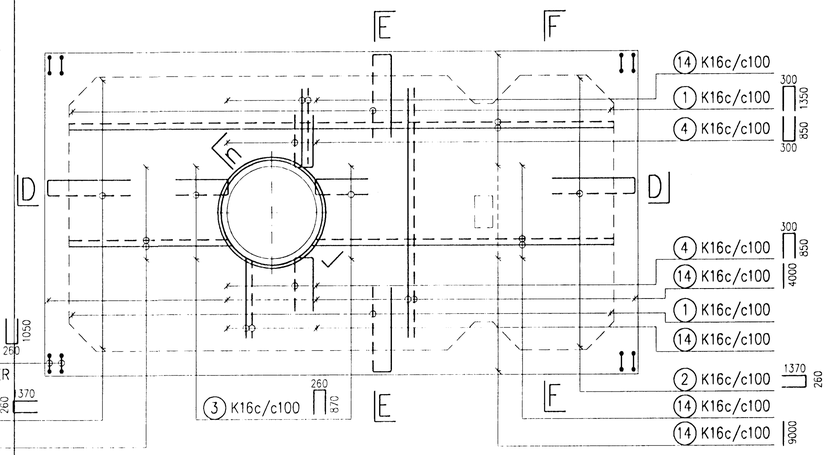

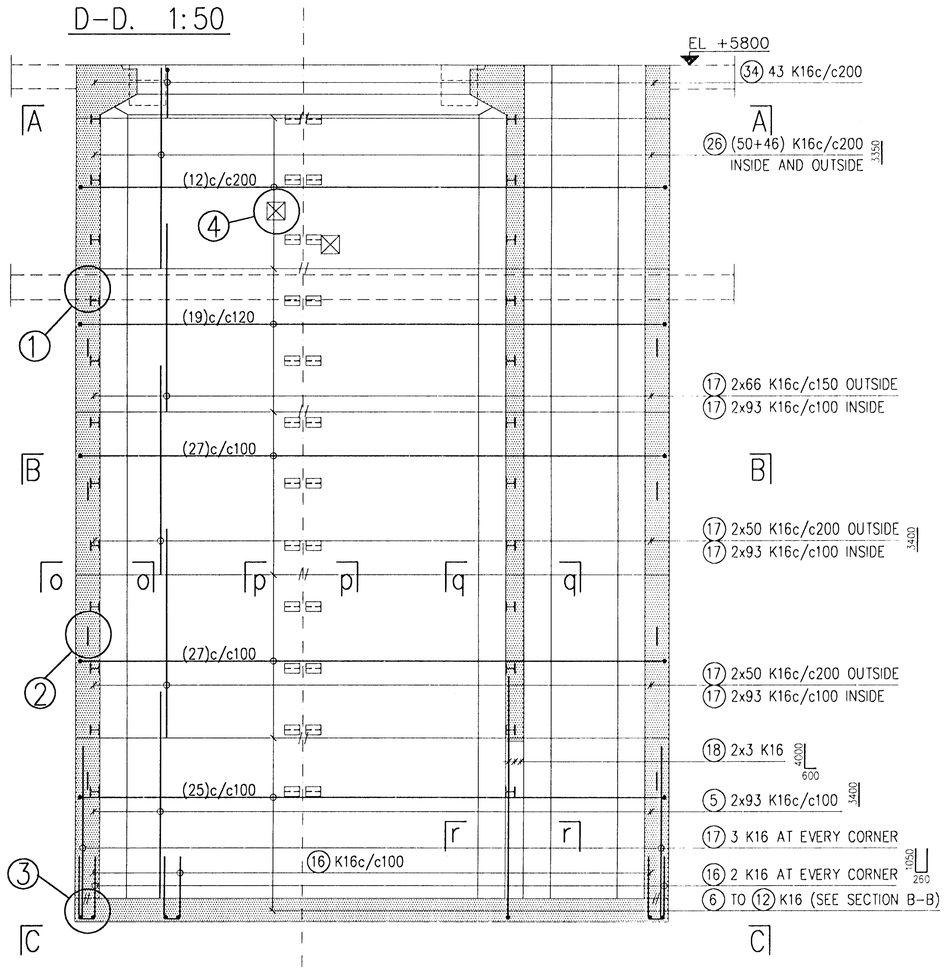

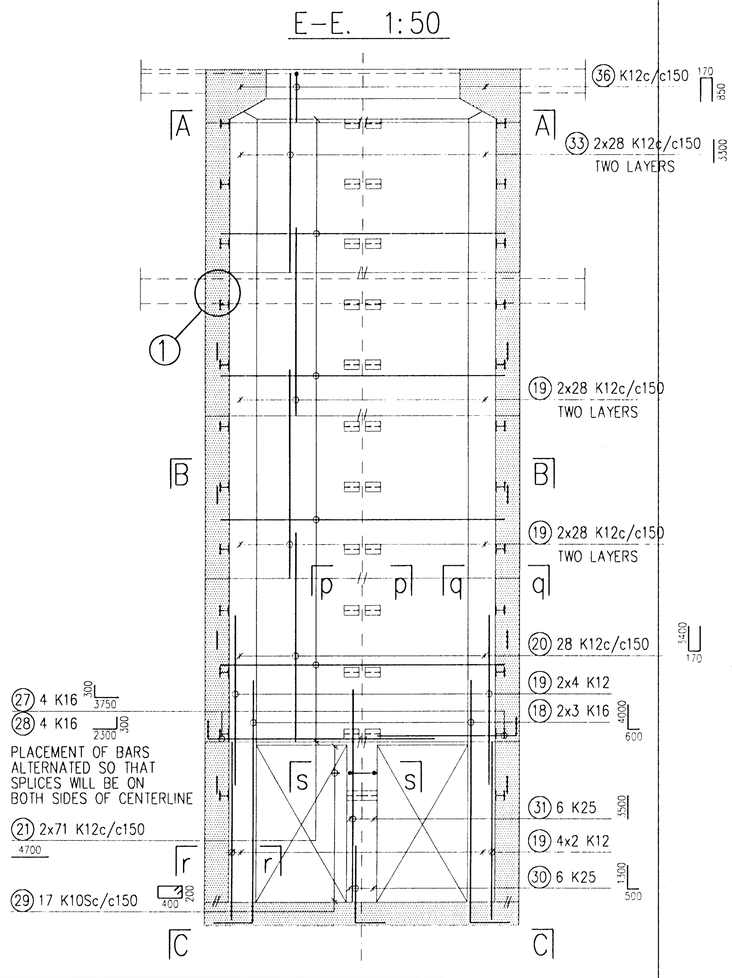

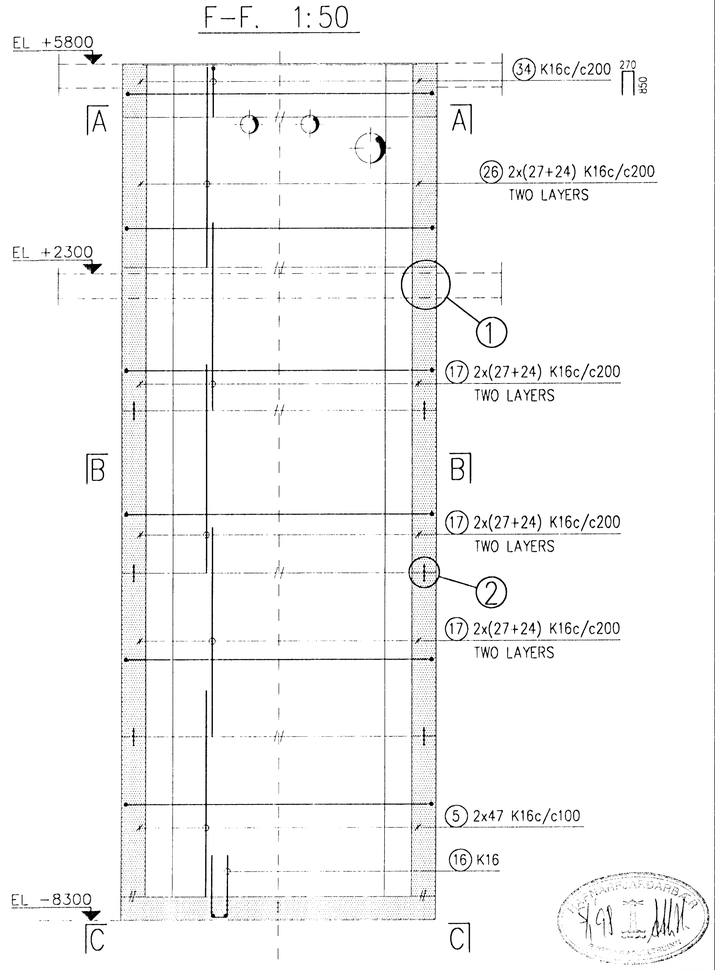

REV. NO.	DATE	REVISION	BY	APP.
2 B	10.11.1997	AS BUILD	UH	
1	15.8.1996	ISSUED FOR CONSTRUCTION	UH	
0	20.5.1996	ISSUED FOR TENDER		

REV. NO.	DATE	REVISION	BY	APP.

NOTES

REFERENCE DRAWING	DRAWING NUMBER
SECTION n	193.446
SECTION t AND DETAIL 4	193.445
DETAILS 1, 2 AND 3	193.444
SECTIONS o, p, q, r and s	193.444
SECTIONS g, h, i, j, k, l and m	193.443
MAIN DIMENSIONS	193.441

This drawing is our property and given for personal use only. It may not be copied or made available to others without our permission. The receiver is responsible for any misuse.

ICELANDIC ALUMINIUM COMPANY LTD.

DRAWN	17.5.1996	HHH
APPROVED	17.5.1996	UH
PROCESS		
PROJECT		
SCALE 1:50	FORMAT A1	

CASTHOUSE EXTENSION
STRUCTURAL
CASTING MACHINE PIT
MAIN REINFORCEMENT

ALUSUISSE ALESA
ALESA
ALUSUISSE ENGINEERING LTD.
ZURICH SWITZERLAND

VERKFRAEDISTOFAN ONN SF.
TAEKNITHJONUSTAN SF.

79000–34242 REVISION 2

193.442 B