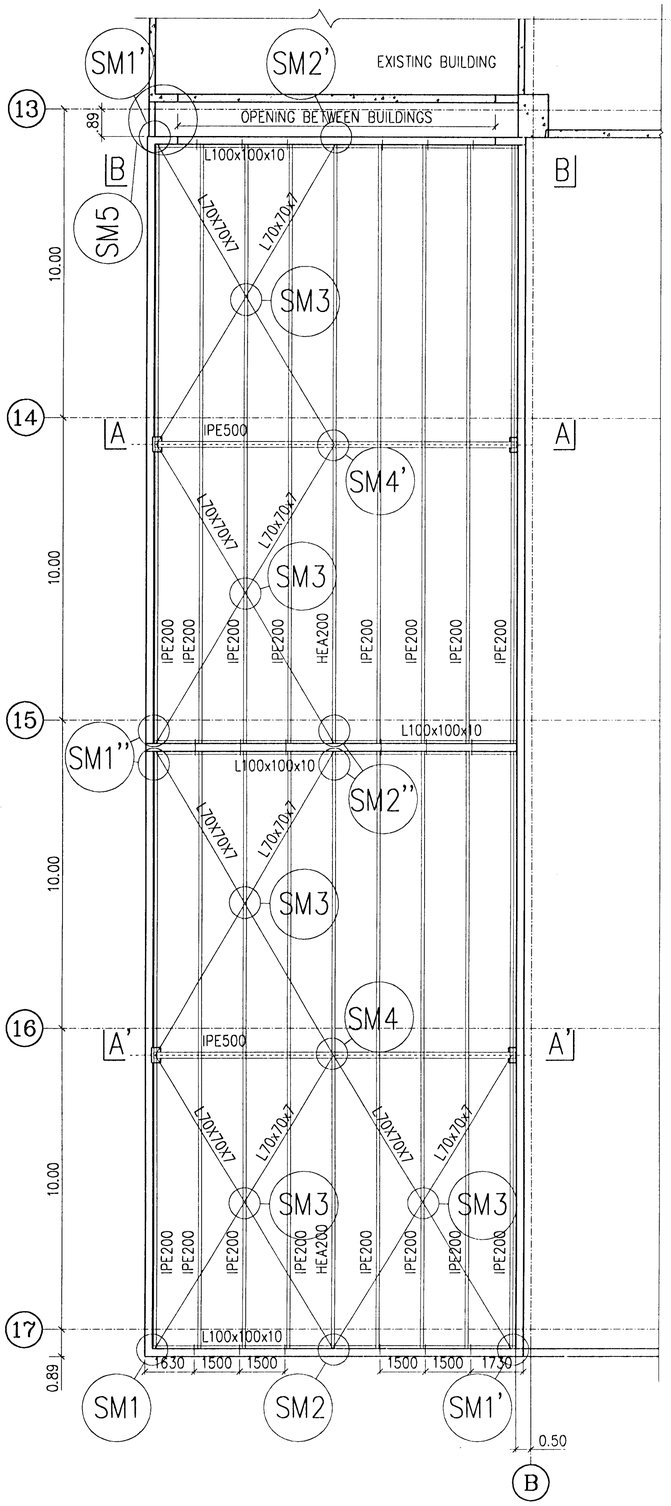

SM1. 1:10

SM1' IS SYMMETRIC.
SM1'' IS IDENTICAL EXCEPT THAT THE TWO ANCHOR BOLTS IN WALL PARALLEL TO LINE 15 ARE REPLACED BY TWO ø16 BOLTS THAT GO THROUGH THE WALL AND ARE USED TO FASTEN ANGLES ON BOTH SIDES OF THE WALL.

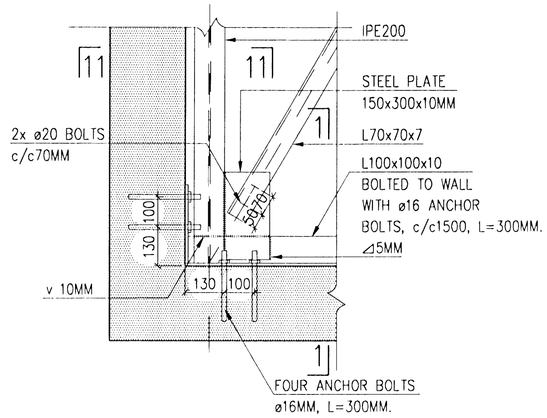

1-1. 1:10

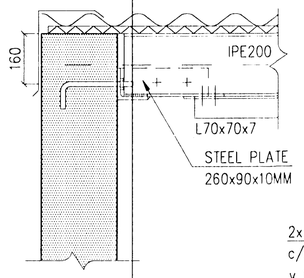

SM2. 1:10

SM2' HAS A BRACE FROM ONLY ONE SIDE.
SM2'' IS IDENTICAL EXCEPT THAT THE EXTRA TWO ANCHOR BOLTS ARE REPLACED BY TWO ø20 BOLTS THAT GO THROUGH THE WALL AND ARE USED TO FASTEN ANGLES ON BOTH SIDES OF THE WALL.

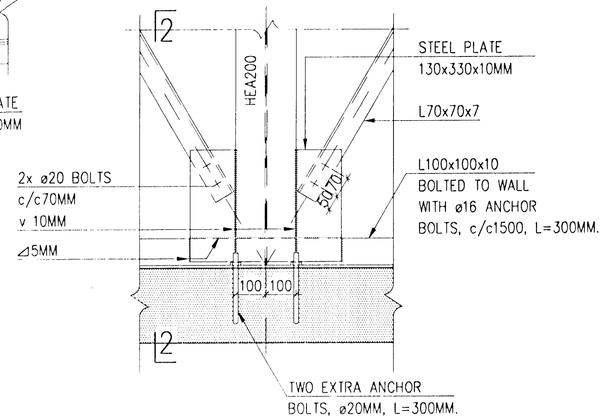

11-11. 1:10

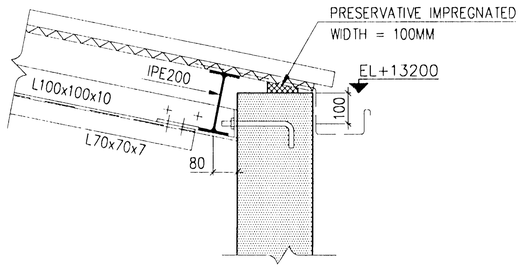

2-2. 1:10

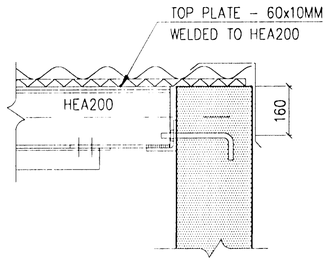

SM5. 1:10

CONNECTION BETWEEN OLD AND NEW BUILDINGS

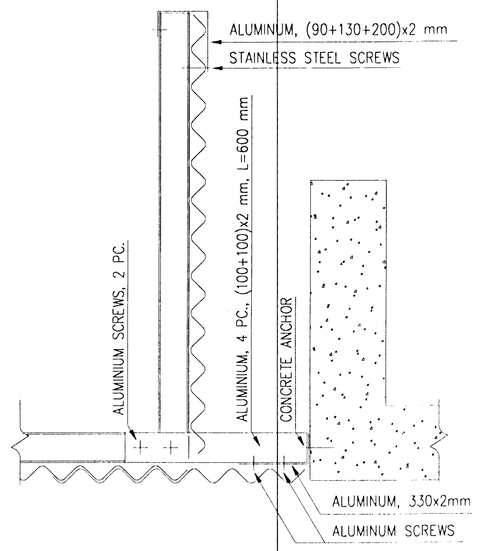

SM3. 1:10

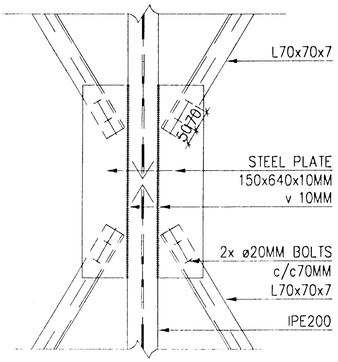

SM4. 1:10

SM4' IS IDENTICAL EXCEPT THERE ARE NO PLATES ON RIGHT SIDE OF ROOF PURLIN.
ALL BRACES L70x70x7MM.

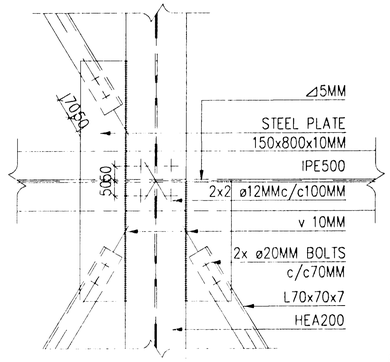

REV. NO.	DATE	REVISION	BY	APP.	REV. NO.	DATE	REVISION	BY	APP.
2 B	15.11.1997	AS BUILD	UH						
1	15.8.1996	ISSUED FOR CONSTRUCTION	UH						
0	20.5.1996	ISSUED FOR TENDER							

NOTES

REFERENCE DRAWING	DRAWING NUMBER
SECTION B-B	193.494
SECTION A-A	193.492

This drawing is our property and given for personal use only. It may not be copied or made available to others without our permission. The receiver is responsible for any misuse.

ICELANDIC ALUMINIUM COMPANY LTD.

DRAWN	5.5.1996	HHH
APPROVED	5.5.1996	UH/JK
PROCESS		
PROJECT		
SCALE 1:100		FORMAT A1

ALUSUISSE ALESA — ALESA ALUSUISSE ENGINEERING LTD. ZURICH SWITZERLAND

VERKFRAEDISTOFAN ONN SF.
TAEKNITHJONUSTAN SF.

CASTHOUSE EXTENSION - DROSS STORAGE
STRUCTURAL
ROOF PLAN
DETAILS

79000-34293 — REVISION 2

193.493 — B