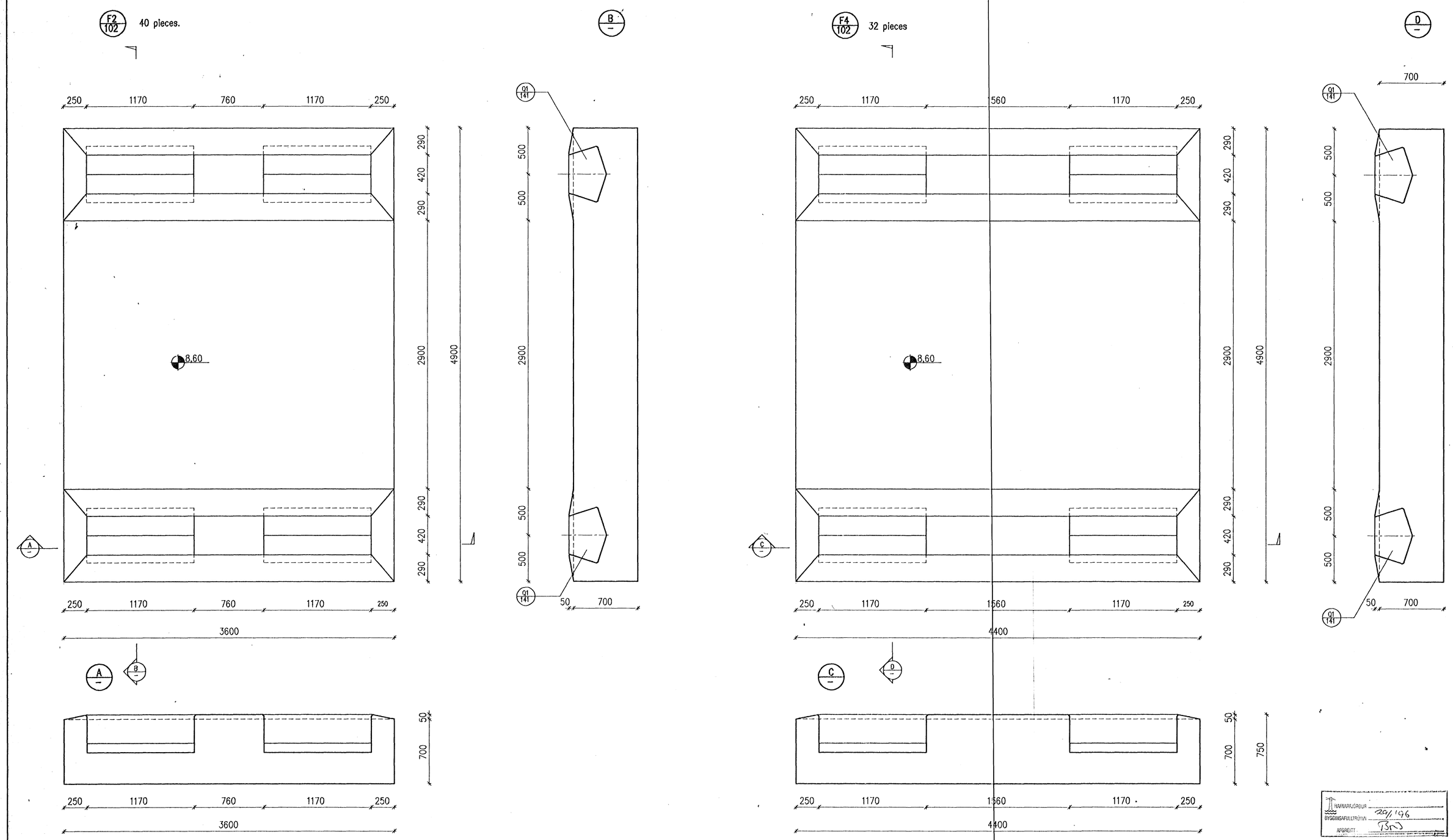

HAFNARFJÖRÐUR
BYGGINGAFULLTRÚINN 29/1 '96
AFGREITT

CONCRETE: C30/37-38-S2

1:20
1000 0 1000 2000 mm

REV. NO.	DATE	REVISION	BY	APP.	REV. NO.	DATE	REVISION	BY	APP.	NOTES	REFERENCE DRAWING	DRAWING NUMBER
1	1996.01.02	APPROVED FOR CONSTRUCTION	Kgs	N.I.								

This drawing is our property and given for personal use only. It may not be copied or made available to others without our permission. The receiver is responsible for any misuse.

VST CONSULTING ENGINEERS Ltd.
Armula 4 108 Reykjavik Iceland
Tel: +354 569 5000 Fax: +354 569 5010

95.120 – 12.112

ICELANDIC ALUMINIUM COMPANY LTD.

DRAWN	95.10.28	FGS
APPROVED	95.10.28	KGS
PROCESS	95.10.28	NI
PROJECT	95.10.28	NI
SCALE	1:20	FORMAT A1

POTROOM NO. 3
CONCRETE WORK
FOUNDATION F2 & F4
FORMWORK

ALUSUISSE ALESA — ALESA ALUSUISSE ENGINEERING LTD. ZURICH SWITZERLAND

79000-32312 — REVISION 1

ISAL — ICELANDIC ALUMINIUM CO. LTD

186.612

07-NOV-1995 I:\{95-1XX}\95120\DWG\DWG-C\AL-C112.DWG