K – COLUMN (R1)

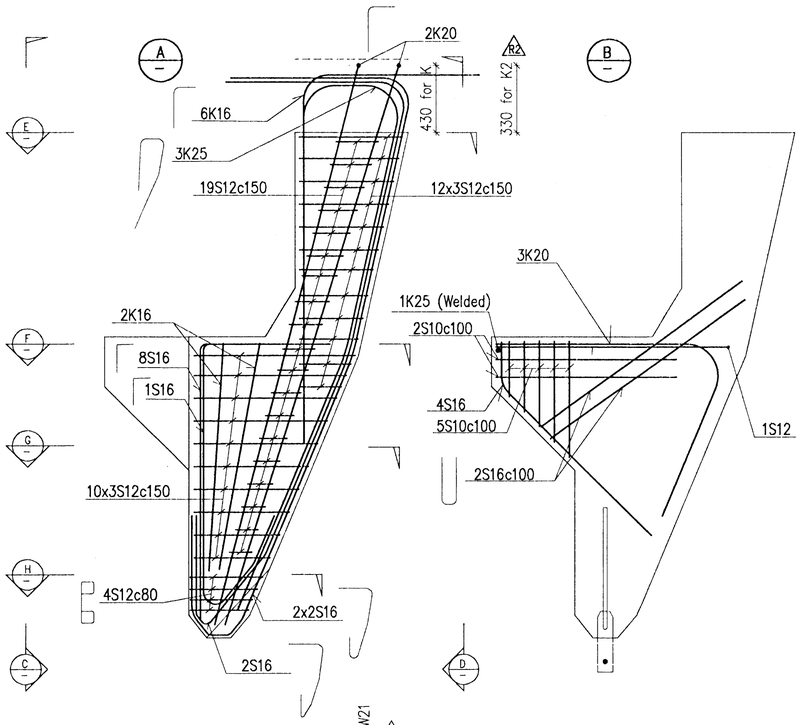

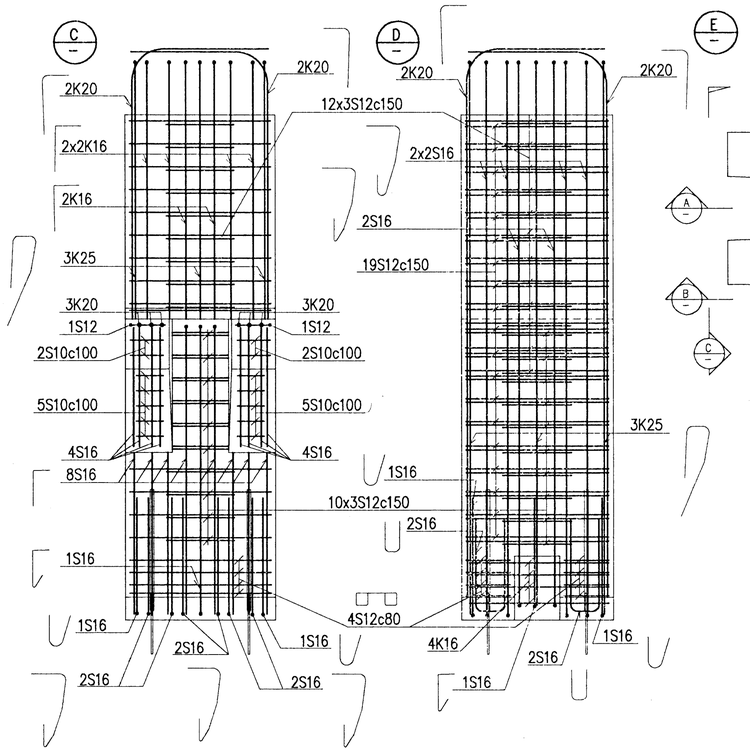

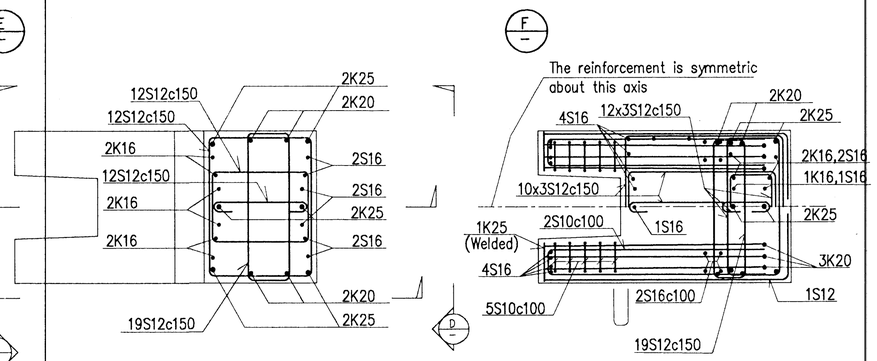

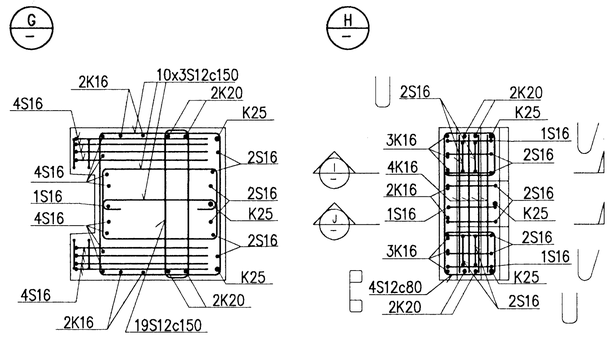

W – COLUMN (R3)

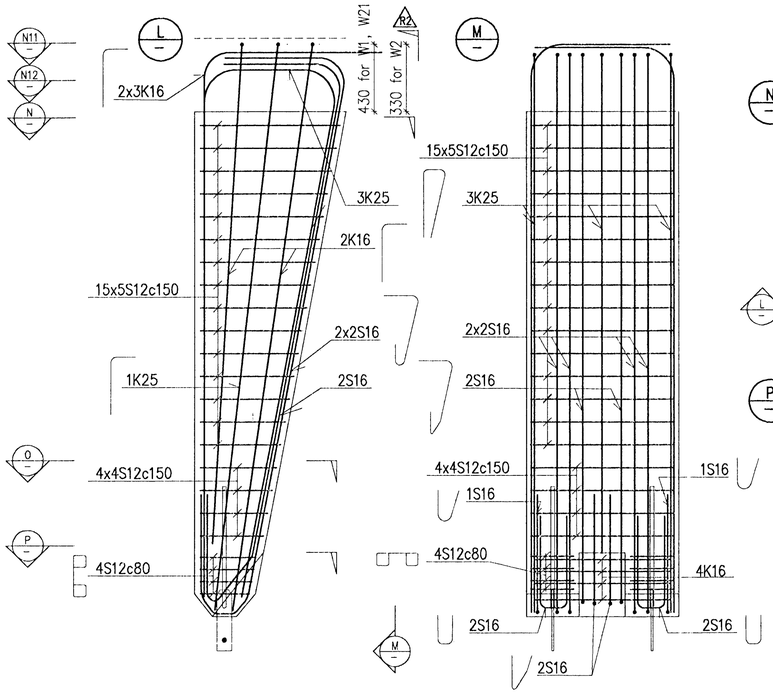

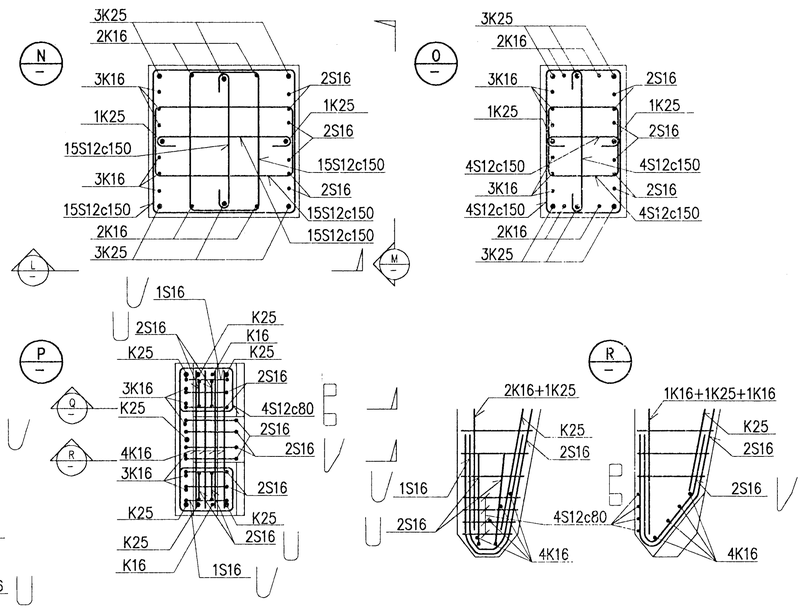

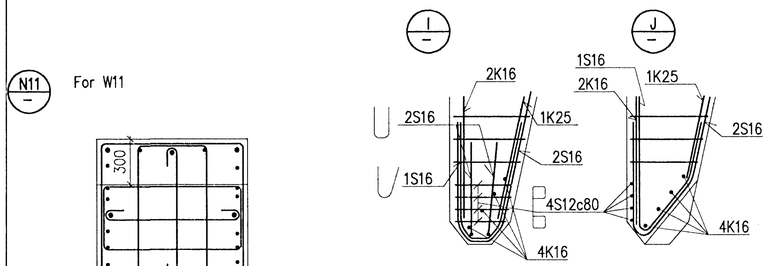

N11 For W11

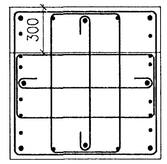

Reinforcement is the same as shown in section (N)

N12 For W21

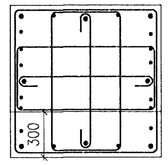

NUMBER OF CATHODE COLUMNS

Type K	576 pieces	R3
Type K2	136 pieces	R2

NUMBER OF OUTSIDE COLUMNS

Type W1	288 pieces	R3
Type W2	34 pieces	R2
Type W11	17 pieces	Recess W11 "c", h=550 mm
Type W21	17 pieces	Recess W21 "d", h=550 mm

1:20 — 1000 — 0 — 1000 — 2000 mm

HAFNARFJÖRDUR BYGGINGARFULLTRÚI 28/3'96 AFGREITT

VST CONSULTING ENGINEERS Ltd. Armula 4 108 Reykjavik Iceland Tel: +354 569 5000 Fax: +354 569 5010

95.120 – 12.178

3	1996.03.25	NUMBER OF COLUMNS	NI	N.I.							
2	1996.01.02	APPROVED FOR CONSTRUCTION	FGS	N.I.							
1	1995.12.08	FORM OF K COLUMN	FGS	N.I.							
REV. NO.	DATE	REVISION	BY	APP.	REV. NO.	DATE	REVISION	BY	APP.	NOTES	REFERENCE DRAWING

DRAWING NUMBER

This drawing is our property and given for personal use only. It may not be copied or made available to others without our permission. The receiver is responsible for any misuse.

ICELANDIC ALUMINIUM COMPANY LTD.

DRAWN	95.10.28	FGS	
APPROVED	95.10.28	KGS	
PROCESS	95.10.28	NI	
PROJECT	95.10.28	NI	
SCALE	1:20	FORMAT A1	

POTROOM NO. 3
CONCRETE WORK
CATHODE & OUTSIDE COLUMNS
REINFORCEMENT

ALUSUISSE ALESA — ALUSUISSE ALESA ENGINEERING LTD. ZURICH SWITZERLAND

79000-32378 — REVISION 3

ISAL — ICELANDIC ALUMINIUM CO. LTD

186.678

08-DEC-1995 I:\{95-1XX}\95120\DWG\DWG-C\AL-C178.DWG