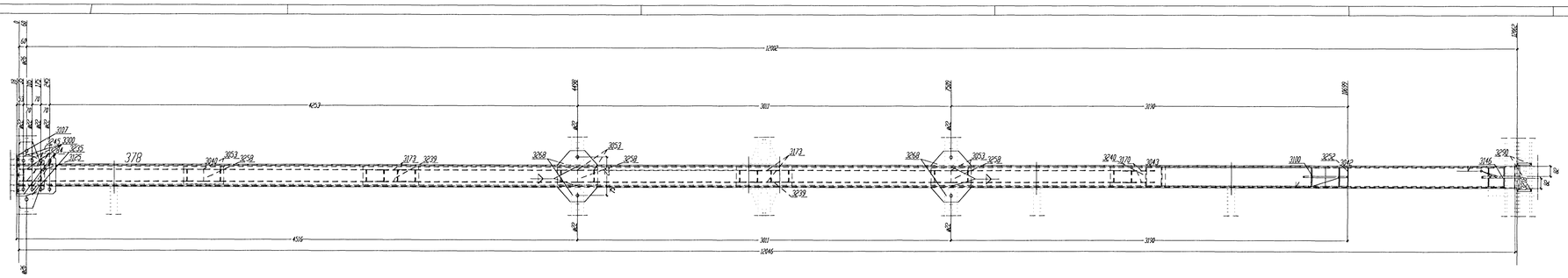

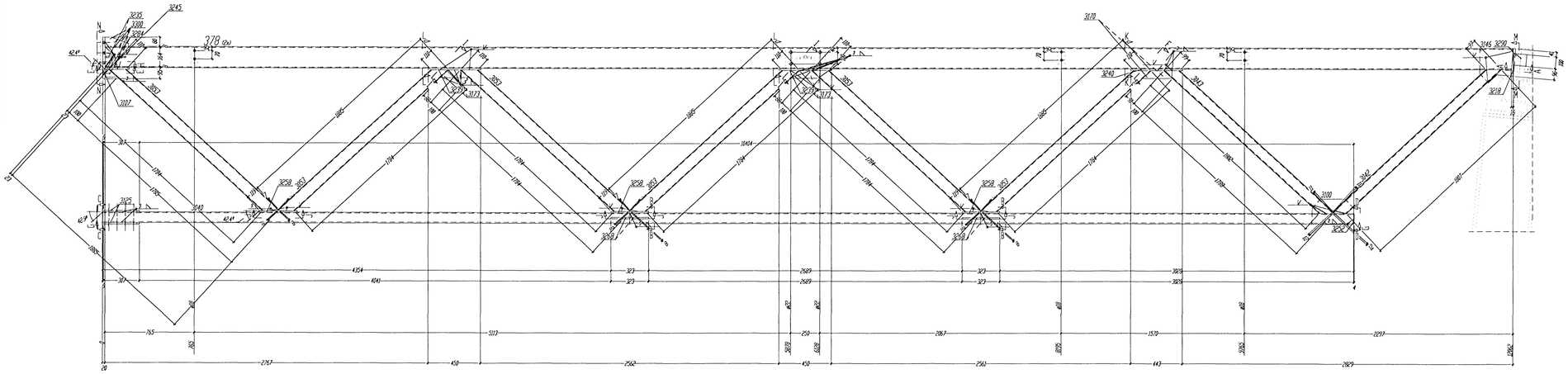

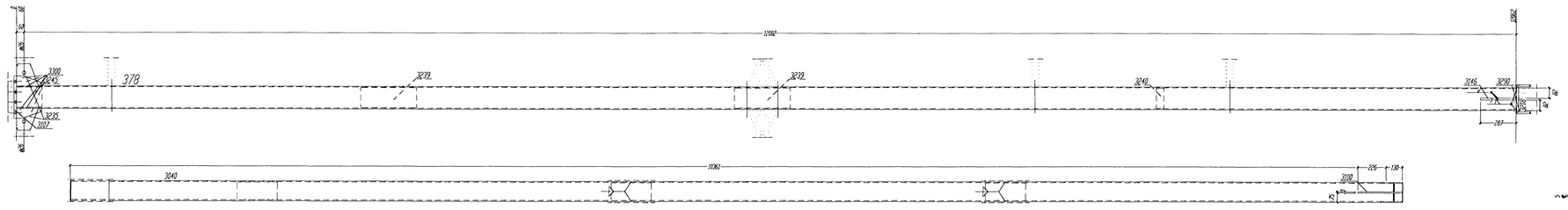

view 378 , G-G

** bill of material for 1 Ship- pos. 378 total 2 x done

Nr.	Trf	pos.	designation	qty	profil	quality	length	weight	Rem.
1	3	378		1	HSB800K3	S355J0K3	10962	404.78	
2	3	3040		1	HSB560K6K11	S355J0K3	10717	278.77	
3	3	3042		1	HSB560K6K36	S355J0K3	1919	38.50	
4	3	3043		1	HSB560K6K36	S355J0K3	1888	38.43	
5	3	3053		6	HSB800K4	S235J0K2	1885	135.15	
6	3	3108		1	BL10K156	S235J0K2	214	5.18	
7	3	3107		1	BL10K140	S355J0K3	255	18.97	
8	3	3025		6	BL10K300	S355J0K3	307	17.35	
9	3	3146		1	BL15K297	S355J0K3	293	9.88	
10	3	3170		2	BL6K259	S235J0K2	67	1.54	
11	3	3173		4	BL6K250	S235J0K2	67	3.19	
12	3	3219		1	BL20K610	S235J0K2	237	7.43	
13	3	3225		6	BL10K175	S235J0K2	175	4.18	
14	3	3229		6	BL15K150	S235J0K2	450	16.95	
15	3	3240		1	BL15K150	S235J0K2	443	8.34	
16	3	3245		1	BL15K150	S355J0K3	285	3.86	
17	3	3252		1	BL4K150	S235J0K2	88	.38	
18	3	3258		3	FL14K412	S355J0K3	323	12.78	
19	3	3259		4	BL10K125	S235J0K2	323	12.68	
20	3	3294		2	BL6K106	S355J0K3	67	.67	
21	3	3298		2	FL10K115	S355J0K3	110	2.59	
22	3	3300		6	BL8K80	S355J0K3	286	6.83	
total weight (kg)								1821.23	

Shipping dimensions (H x B x L): 1592 x 538 x 12798

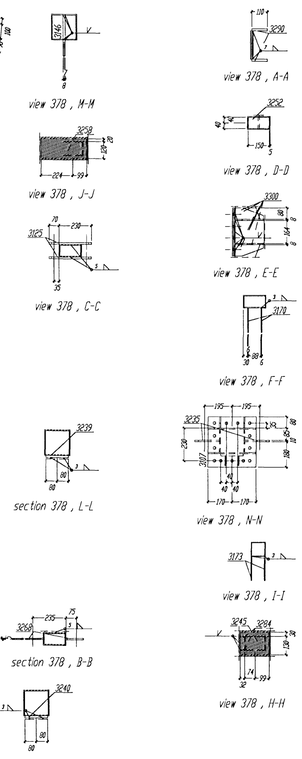

view 378 , M-M
view 378 , A-A
view 378 , J-J
view 378 , D-D
view 378 , C-C
view 378 , E-E
view 378 , F-F
section 378 , L-L
view 378 , N-N
view 378 , I-I
section 378 , B-B
view 378 , H-H
section 378 , K-K

Byggingafulltrúi Hafnarfjarðar
Aðgreint þann
18. FEB. 2008

Fyrir hönd Conís ehf, kt. 600105-1400 staðfestist að teikning þessi hefur verið yfirfarin. Teikningin er í samræmi við íslenska staðla og reglugerðir. 28/9 '07
130657-4439
Nafn Kennitala

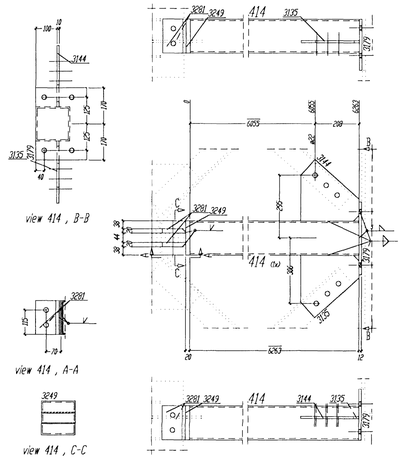

view 414 , B-B
view 414 , A-A
view 414 , C-C

** bill of material for 1 Ship- pos. 414 total 1 x done

Nr.	Trf	pos.	designation	qty	profil	quality	length	weight	Rem.
1	3	414		1	HSB560K3	S235J0K2	6263	185.48	
2	3	3135		1	BL10K293	S235J0K2	275	5.32	
3	3	3144		1	BL10K299	S235J0K2	275	6.24	
4	3	3179		1	BL12K140	S235J0K2	340	7.59	
5	3	3249		1	BL20K150	S235J0K2	150	4.82	
6	3	3281		2	FL11K410	S235J0K2	160	5.53	
total weight (kg)								2513.9	

Shipping dimensions (H x B x L): 240 x 742 x 6415

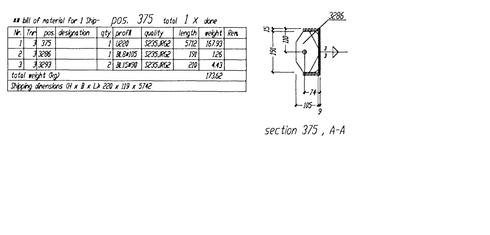

view 375 , B-B
view 375 , C-C
section 375 , A-A

** bill of material for 1 Ship- pos. 375 total 1 x done

Nr.	Trf	pos.	designation	qty	profil	quality	length	weight	Rem.
1	3	375		1	U850	S235J0K2	5742	167.93	
2	3	3286		1	BL8K415	S235J0K2	119	1.26	
3	3	3293		2	BL15K90	S235J0K2	219	4.43	
total weight (kg)								173.62	

Shipping dimensions (H x B x L): 220 x 119 x 5742

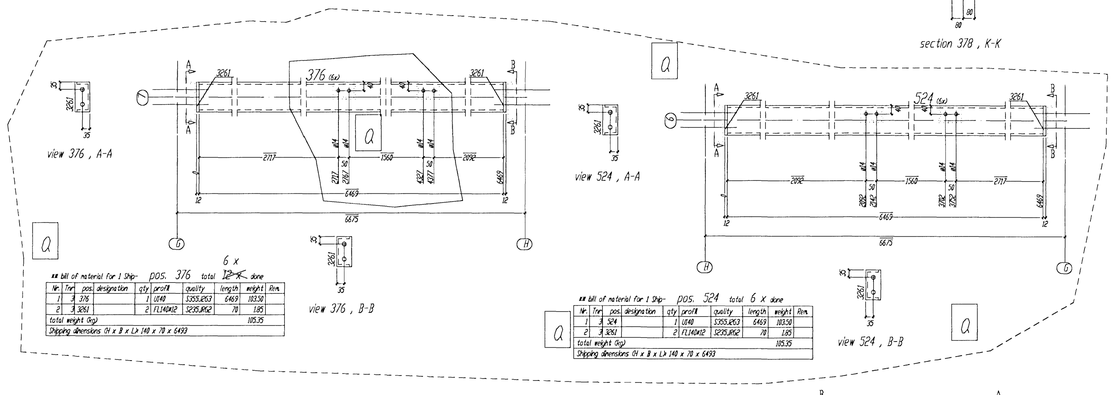

view 376 , A-A
view 376 , B-B
view 524 , A-A
view 524 , B-B

** bill of material for 1 Ship- pos. 376 total 12 x done

Nr.	Trf	pos.	designation	qty	profil	quality	length	weight	Rem.
1	3	376		1	U140	S355J0K3	6493	103.30	
2	3	3261		2	FL14K412	S235J0K2	70	1.85	
total weight (kg)								105.15	

Shipping dimensions (H x B x L): 140 x 70 x 6493

** bill of material for 1 Ship- pos. 524 total 6 x done

Nr.	Trf	pos.	designation	qty	profil	quality	length	weight	Rem.
1	3	524		1	U140	S355J0K3	6493	103.30	
2	3	3261		2	FL14K412	S235J0K2	70	1.85	
total weight (kg)								105.15	

Shipping dimensions (H x B x L): 140 x 70 x 6493

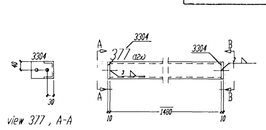

view 377 , A-A
view 377 , B-B

** bill of material for 1 Ship- pos. 377 total 12 x done

Nr.	Trf	pos.	designation	qty	profil	quality	length	weight	Rem.
1	3	377		1	U80	S355J0K3	1468	12.79	
2	3	3304		2	FL8K40	S235J0K2	105	1.32	
total weight (kg)								14.11	

Shipping dimensions (H x B x L): 80 x 105 x 1508

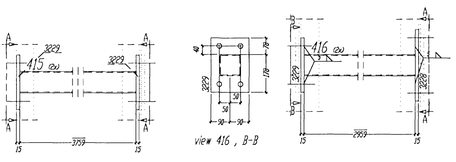

view 415 , A-A

** bill of material for 1 Ship- pos. 415 total 2 x done

Nr.	Trf	pos.	designation	qty	profil	quality	length	weight	Rem.
1	3	415		1	HSB180K4	S235J0K2	3759	44.98	
2	3	3229		2	BL15K180	S235J0K2	256	10.85	
total weight (kg)								55.78	

Shipping dimensions (H x B x L): 256 x 180 x 3759

view 416 , B-B
view 416 , A-A

** bill of material for 1 Ship- pos. 416 total 2 x done

Nr.	Trf	pos.	designation	qty	profil	quality	length	weight	Rem.
1	3	416		1	HSB180K4	S235J0K2	2959	35.36	
2	3	3229		1	BL15K180	S235J0K2	326	7.32	
3	3	3229		1	BL15K180	S235J0K2	256	5.43	
total weight (kg)								47.91	

Shipping dimensions (H x B x L): 326 x 180 x 2989

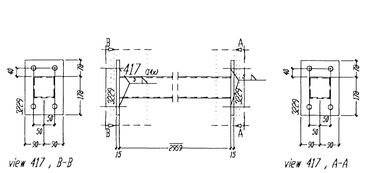

view 417 , B-B
view 417 , A-A

** bill of material for 1 Ship- pos. 417 total 14 x done

Nr.	Trf	pos.	designation	qty	profil	quality	length	weight	Rem.
1	3	417		1	HSB180K4	S235J0K2	2959	35.36	
2	3	3229		2	BL15K180	S235J0K2	256	10.85	
total weight (kg)								46.22	

Shipping dimensions (H x B x L): 256 x 180 x 2989

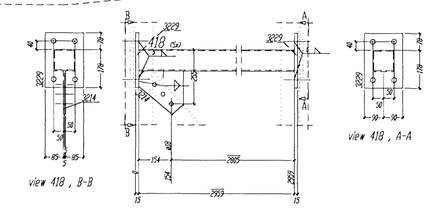

view 418 , B-B
view 418 , A-A

** bill of material for 1 Ship- pos. 418 total 5 x done

Nr.	Trf	pos.	designation	qty	profil	quality	length	weight	Rem.
1	3	418		1	HSB180K4	S235J0K2	2959	35.36	
2	3	3214		1	BL10K185	S235J0K2	210	3.38	
3	3	3229		2	BL15K180	S235J0K2	256	10.85	
total weight (kg)								49.59	

Tolerance for welded constructions According to DIN 8570, P:14-D/B14, 10.87

Welding (W P S) according to DIN-EN 288 - 2

All unmarked welds to be fillet continuous a=4mm thick, not greater than 0.7 d of the thinner element

The material for cap plates 120 mm thick to be examined for laminations

Required torques,prestressing forces and forced tension angles according to DIN 18800 Pt. 7, 05.83

Bolts	1 Required tightening forces F_v	2 Torque techniques: Manual torque wrench: Required grip length range (selected)	Torque M_A	3 Rotation techniques: Rotation impact wrench: Bolt tightening time	Tightening time t_A	Prestressing of HV bolts Class 8.8 according to: 4 Angle of rotation techniques: Required tightening torque M_A	Grip length range	Turn angle α_N	Turn angle tolerance $\Delta\alpha$
	kN	kgm	Nm	s	s	Nm	mm	°	°
M12	50	5.0	50	1.0	3.0	80	3 - 9	90	± 15
M16	100	12.0	120	1.5	4.5	200	9 - 15	60	± 10
M20	160	17.0	170	2.0	6.0	350	15 - 21	45	± 7.5
M22	190	22.0	220	2.5	7.5	450	21 - 27	36	± 6
M24	225	28.0	280	3.0	9.0	600	27 - 33	30	± 5
M27	290	37.0	370	3.5	10.5	900	33 - 39	24	± 4
M30	360	45.0	450	4.0	12.0	1200	39 - 45	20	± 3.5

1) Due to the great dependence of the M-value on the type of thread lubricant adhere to the bolt manufacturer's recommendations.
2) Independently on the lubricant of the threads and surfaces of bolts and nuts.
CAUTION! For not galvanized HV bolts use values from column 3.

BIURO INZYNIERSKIE
Marek i Janina MUCHA
Osiny, ul. Opolska 30a, 46-070 Komprachcice tel.077-46 46 757

	DATE	NAME	SIGNATURE
Designed by	03.06.2007	KMu/Ha	
Checked by			
Verified by			
0.	Rev. edition Feb.28,2008	02.06.2007	KMu/Ha
INDEX	CHANGES	DATE	NAME

SYS SCALE

Pos.375-378, 414-418, 524

DESC.

TJARNARVELLIR 11
Steel- Storage house

DRAWING NO. DRG 215 a

SHEET